Chapter 13, Solution 1.

For coil 1, $L_1 - M_{12} + M_{13} = 6 - 4 + 2 = 4$

For coil 2, $L_2 - M_{21} - M_{23} = 8 - 4 - 5 = -1$

For coil 3, $L_3 + M_{31} - M_{32} = 10 + 2 - 5 = 7$

$$L_T = 4 - 1 + 7 = 10H$$

or $$L_T = L_1 + L_2 + L_3 - 2M_{12} - 2M_{23} + 2M_{12}$$

$$L_T = 6 + 8 + 10 = \underline{\mathbf{10H}}$$

Chapter 13, Solution 2.

$$L = L_1 + L_2 + L_3 + 2M_{12} - 2M_{23}\ 2M_{31}$$

$$= 10 + 12 + 8 + 2x6 - 2x6 - 2x4$$

$$= \underline{\mathbf{22H}}$$

Chapter 13, Solution 3.

$L_1 + L_2 + 2M = 250$ mH (1)

$L_1 + L_2 - 2M = 150$ mH (2)

Adding (1) and (2),

$$2L_1 + 2L_2 = 400 \text{ mH}$$

But, $L_1 = 3L_2$,, or $8L_2 + 400$, and $L_2 = \underline{\mathbf{50\ mH}}$

$$L_1 = 3L_2 = \underline{\mathbf{150\ mH}}$$

From (2), $150 + 50 - 2M = 150$ leads to $M = \underline{\mathbf{25\ mH}}$

$$k = M/\sqrt{L_1L_2} = 2.5/\sqrt{50x150} = \underline{\mathbf{0.2887}}$$

Chapter 13, Solution 4.

(a) For the series connection shown in Figure (a), the current I enters each coil from its dotted terminal. Therefore, the mutually induced voltages have the same sign as the self-induced voltages. Thus,

$$L_{eq} = L_1 + L_2 + 2M$$

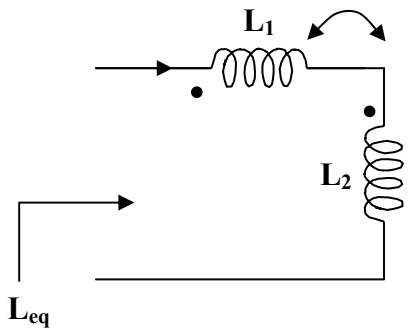

(a)

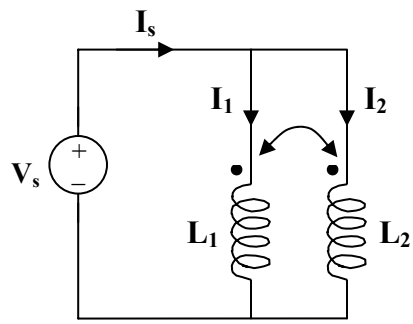

(b)

(b) For the parallel coil, consider Figure (b).

$$I_s = I_1 + I_2 \quad \text{and} \quad Z_{eq} = V_s/I_s$$

Applying KVL to each branch gives,

$$V_s = j\omega L_1 I_1 + j\omega M I_2 \qquad (1)$$

$$V_s = j\omega M I_1 + j\omega L_2 I_2 \qquad (2)$$

or

$$\begin{bmatrix} V_s \\ V_s \end{bmatrix} = \begin{bmatrix} j\omega L_1 & j\omega M \\ j\omega M & j\omega L_2 \end{bmatrix} \begin{bmatrix} I_1 \\ I_2 \end{bmatrix}$$

$$\Delta = -\omega^2 L_1 L_2 + \omega^2 M^2, \quad \Delta_1 = j\omega V_s(L_2 - M), \quad \Delta_2 = j\omega V_s(L_1 - M)$$

$$I_1 = \Delta_1/\Delta, \quad \text{and} \quad I_2 = \Delta_2/\Delta$$

$$I_s = I_1 + I_2 = (\Delta_1 + \Delta_2)/\Delta = j\omega(L_1 + L_2 - 2M)V_s/(-\omega^2(L_1L_2 - M))$$

$$Z_{eq} = V_s/I_s = j\omega(L_1L_2 - M)/[j\omega(L_1 + L_2 - 2M)] = j\omega L_{eq}$$

i.e., $L_{eq} = \underline{\mathbf{(L_1L_2 - M)/(L_1 + L_2 - 2M)}}$

Chapter 13, Solution 5.

(a) If the coils are connected in series,

$$L = L_1 + L_2 + 2M = 25 + 60 + 2(0.5)\sqrt{25x60} = \underline{\mathbf{123.7\ mH}}$$

(b) If they are connected in parallel,

$$L = \frac{L_1L_2 - M^2}{L_1 + L_2 - 2M} = \frac{25x60 - 19.36^2}{25 + 60 - 2x19.36}\text{ mH} = \underline{\mathbf{24.31\ mH}}$$

Chapter 13, Solution 6.

$V_1 = \underline{\mathbf{(R_1 + j\omega L_1)I_1 - j\omega MI_2}}$

$V_2 = \underline{\mathbf{-j\omega MI_1 + (R_2 + j\omega L_2)I_2}}$

Chapter 13, Solution 7.

Applying KVL to the loop,

$$20\angle 30^\circ = I(-j6 + j8 + j12 + 10 - j4x2) = I(10 + j6)$$

where I is the loop current.

$$I = 20\angle 30°/(10 + j6)$$

$$V_o = I(j12 + 10 - j4) = I(10 + j8)$$

$$= 20\angle 30°(10 + j8)/(10 + j6) = \underline{\mathbf{22\angle 37.66°\ V}}$$

Chapter 13, Solution 8.

Consider the current as shown below.

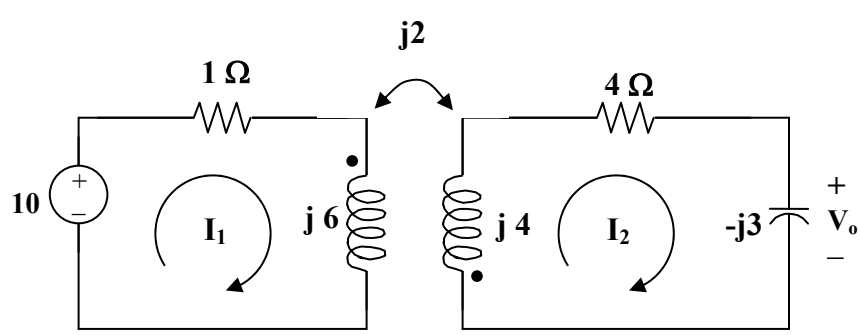

For mesh 1,

$$10 = (1 + j6)I_1 + j2I_2 \qquad (1)$$

For mesh 2, $\quad 0 = (4 + j4 - j3)I_2 + j2I_1$

$$0 = j2I_1 + (4 + j)I_2 \qquad (2)$$

In matrix form,

$$\begin{bmatrix} 10 \\ 0 \end{bmatrix} = \begin{bmatrix} 1 + j6 & j2 \\ j2 & 4 + j \end{bmatrix} \begin{bmatrix} I_1 \\ I_2 \end{bmatrix}$$

$$\Delta = 2 + j25, \text{ and } \Delta_2 = -j20$$

$$I_2 = \Delta_2/\Delta = -j20/(2 + j25)$$

$$V_o = -j3I_2 = -60/(2 + j25) = \underline{\mathbf{2.392\angle 94.57°}}$$

Chapter 13, Solution 9.

Consider the circuit below.

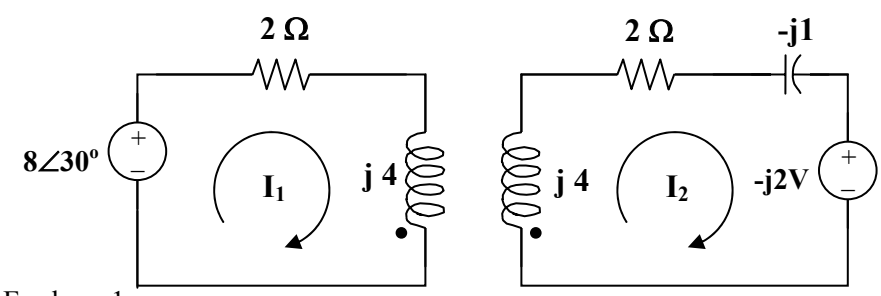

For loop 1,

$$8\angle 30° = (2 + j4)I_1 - jI_2 \qquad (1)$$

For loop 2, $\quad ((j4 + 2 - j)I_2 - jI_1 + (-j2) = 0$

or $\quad I_1 = (3 - j2)i_2 - 2 \qquad (2)$

Substituting (2) into (1), $\quad 8\angle 30° + (2 + j4)2 = (14 + j7)I_2$

$$I_2 = (10.928 + j12)/(14 + j7) = 1.037\angle 21.12°$$

$$V_x = 2I_2 = \underline{\mathbf{2.074\angle 21.12°}}$$

Chapter 13, Solution 10.

Consider the circuit below.

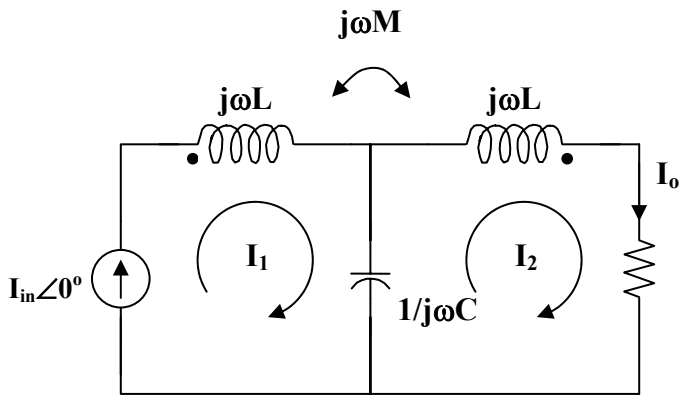

$M = k\sqrt{L_1L_2} = \sqrt{L^2} = L,\ I_1 = I_{in}\angle 0°,\ \ I_2 = I_o$

$I_o(j\omega L + R + 1/(j\omega C)) - j\omega L I_{in} - (1/(j\omega C))I_{in} = 0$

$I_o = \underline{\mathbf{j\, I_{in}(\omega L - 1/(\omega C)) /(R + j\omega L + 1/(j\omega C))}}$

Chapter 13, Solution 11.

Consider the circuit below.

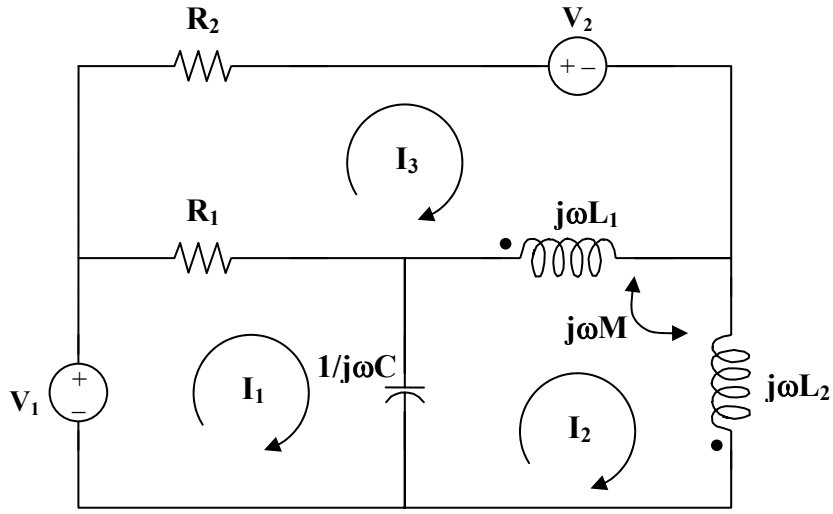

For mesh 1, $V_1 = \underline{\mathbf{I_1(R_1 + 1/(j\omega C)) - I_2(1/j\omega C)) - R_1I_3}}$

For mesh 2,

$0 = \underline{\mathbf{-I_1(1/(j\omega C)) + (j\omega L_1 + j\omega L_2 + (1/(j\omega C)) - j2\omega M)I_2 - j\omega L_1I_3 + j\omega MI_3}}$

For mesh 3, $-V_2 = -R_1I_1 - j\omega(L_1 - M)I_2 + (R_1 + R_2 + j\omega L_1)I_3$

or $V_2 = \underline{\mathbf{R_1I_1 + j\omega(L_1 - M)I_2 - (R_1 + R_2 + j\omega L_1)I_3}}$

Chapter 13, Solution 12.

Let $\omega = 1$.

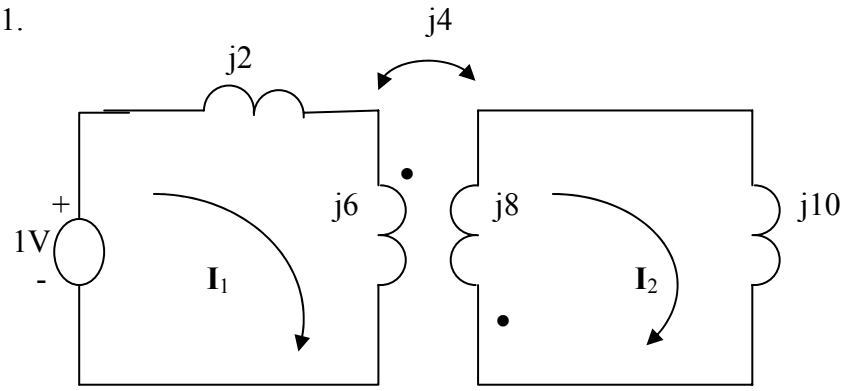

Applying KVL to the loops,

$1 = j8I_1 + j4I_2$ (1)
$0 = j4I_1 + j18I_2$ (2)
Solving (1) and (2) gives $\mathbf{I}_1$ = -j0.1406. Thus

$$Z = \frac{1}{I_1} = jL_{eq} \longrightarrow L_{eq} = \frac{1}{jI_1} = \underline{7.111 \text{ H}}$$

We can also use the equivalent T-section for the transform to find the equivalent inductance.

Chapter 13, Solution 13.

We replace the coupled inductance with an equivalent T-section and use series and parallel combinations to calculate **Z.** Assuming that $\omega = 1$,

$L_a = L_1 - M = 18 - 10 = 8, \quad L_b = L_2 - M = 20 - 10 = 10, \quad L_c = M = 10$
The equivalent circuit is shown below:

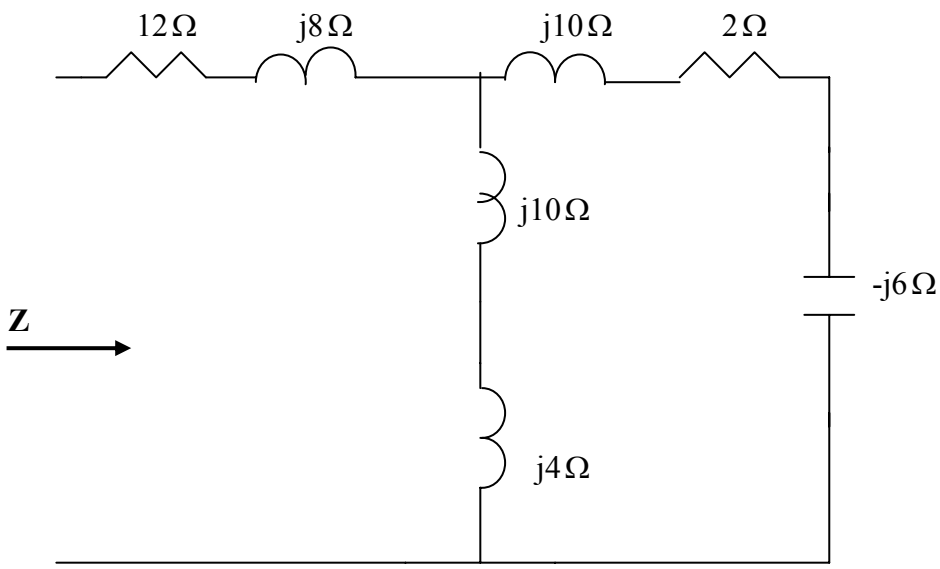

Z=12 +j8 + j14//(2 + j4) = **<u>13.195 + j11.244Ω</u>**

Chapter 13, Solution 14.

To obtain V_{Th}, convert the current source to a voltage source as shown below.

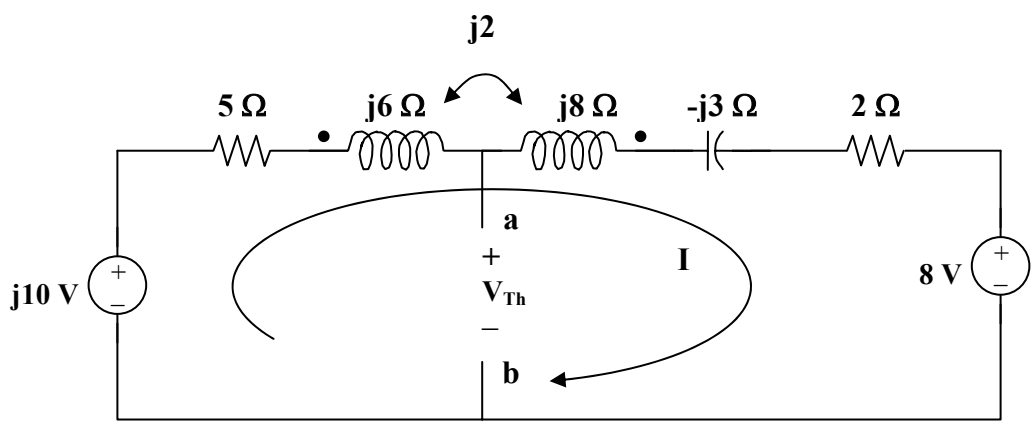

Note that the two coils are connected series aiding.

$$\omega L = \omega L_1 + \omega L_2 - 2\omega M$$

$$j\omega L = j6 + j8 - j4 = j10$$

Thus, $$-j10 + (5 + j10 - j3 + 2)I + 8 = 0$$

$$I = (-8 + j10)/(7 + j7)$$

But, $$-j10 + (5 + j6)I - j2I + V_{Th} = 0$$

$$V_{Th} = j10 - (5 + j4)I = j10 - (5 + j4)(-8 + j10)/(7 + j7)$$

$$V_{Th} = \underline{\mathbf{5.349\angle 34.11°}}$$

To obtain Z_{Th}, we set all the sources to zero and insert a 1-A current source at the terminals a–b as shown below.

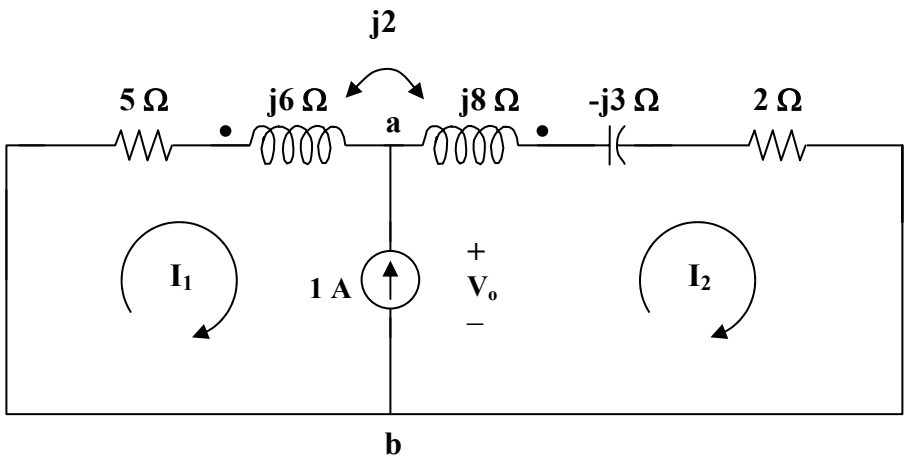

Clearly, we now have only a super mesh to analyze.

$$(5 + j6)I_1 - j2I_2 + (2 + j8 - j3)I_2 - j2I_1 = 0$$

$$(5 + j4)I_1 + (2 + j3)I_2 = 0 \qquad (1)$$

But, $\quad I_2 - I_1 = 1$ or $I_2 = I_1 - 1 \qquad (2)$

Substituting (2) into (1), $\quad (5 + j4)I_1 + (2 + j3)(1 + I_1) = 0$

$$I_1 = -(2 + j3)/(7 + j7)$$

Now, $\quad ((5 + j6)I_1 - j2I_1 + V_o = 0$

$$V_o = -(5 + j4)I_1 = (5 + j4)(2 + j3)/(7 + j7) = (-2 + j23)/(7 + j7) = 2.332\angle 50°$$

$$Z_{Th} = V_o/1 = \underline{\mathbf{2.332\angle 50°\ ohms}}$$

Chapter 13, Solution 15.

To obtain I_N, short-circuit a–b as shown in Figure (a).

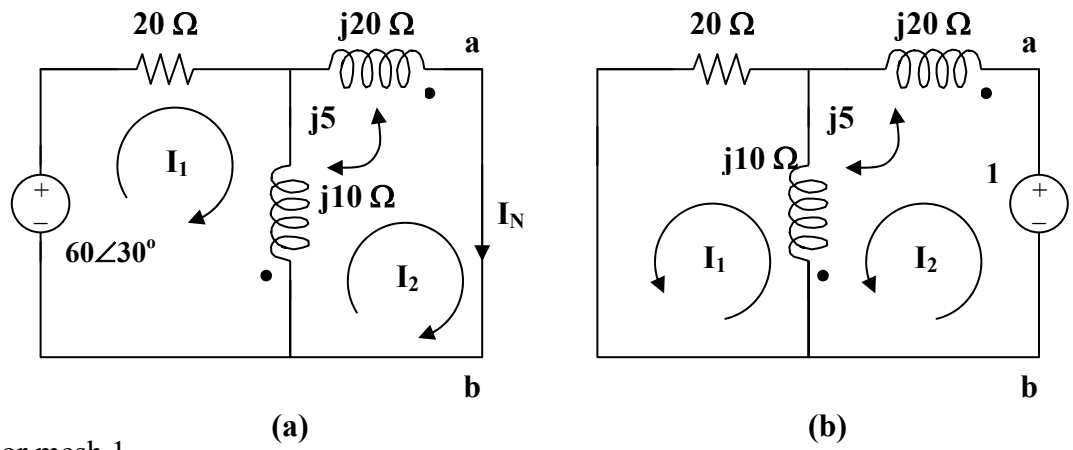

(a) **(b)**

For mesh 1,

$$60\angle 30° = (20 + j10)I_1 + j5I_2 - j10I_2$$

or $$12\angle 30° = (4 + j2)I_1 - jI_2 \qquad (1)$$

For mesh 2,

$$0 = (j20 + j10)I_2 - j5I_1 - j10I_1$$

or $$I_1 = 2I_2 \qquad (2)$$

Substituting (2) into (1), $$12\angle 30° = (8 + j3)I_2$$

$$I_N = I_2 = 12\angle 30°/(8 + j3) = \underline{\mathbf{1.404\angle 9.44°\ A}}$$

To find Z_N, we set all the sources to zero and insert a 1-volt voltage source at terminals a–b as shown in Figure (b).

For mesh 1, $$1 = I_1(j10 + j20 - j5x2) + j5I_2$$

$$1 = j20I_1 + j5I_2 \qquad (3)$$

For mesh 2, $$0 = (20 + j10)I_2 + j5I_1 - j10I_1 = (4 + j2)I_2 - jI_1$$

or $$I_2 = jI_1/(4 + j2) \qquad (4)$$

Substituting (4) into (3), $$1 = j20I_1 + j(j5)I_1/(4 + j2) = (-1 + j20.5)I_1$$

$$I_1 = 1/(-1 + j20.5)$$

$$Z_N = 1/I_1 = \underline{\mathbf{(-1 + j20.5)\ ohms}}$$

Chapter 13, Solution 16.

To find $\mathbf{I}_N$, we short-circuit a-b.

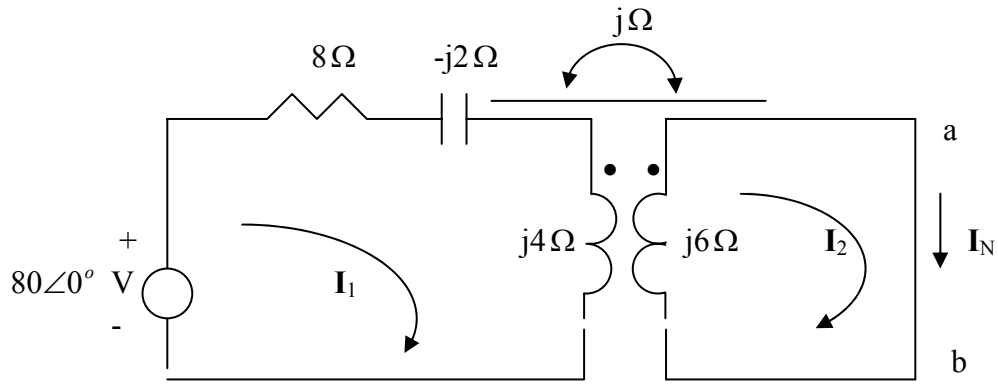

$$-80 + (8 - j2 + j4)I_1 - jI_2 = 0 \quad \longrightarrow \quad (8 + j2)I_1 - jI_2 = 80 \qquad (1)$$

$$j6I_2 - jI_1 = 0 \quad \longrightarrow \quad I_1 = 6I_2 \qquad (2)$$

Solving (1) and (2) leads to

$$I_N = I_2 = \frac{80}{48 + j11} = 1.584 - j0.362 = \underline{1.6246\angle -12.91^o \text{ A}}$$

To find Z_N, insert a 1-A current source at terminals a-b. Transforming the current source to voltage source gives the circuit below.

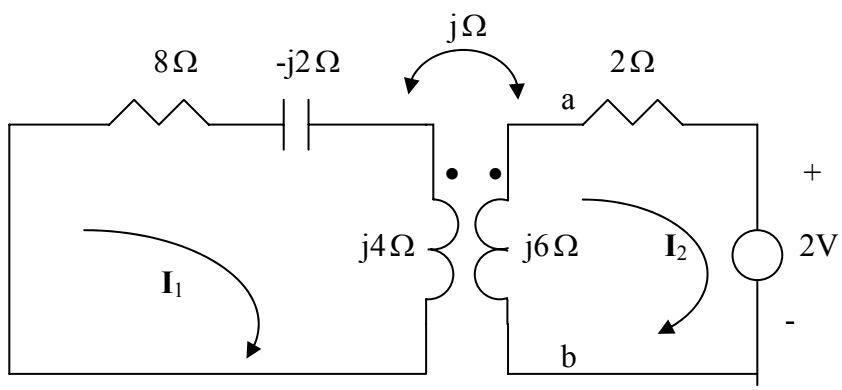

$$0 = (8 + j2)I_1 - jI_2 \quad \longrightarrow \quad I_1 = \frac{jI_2}{8 + j2} \qquad (3)$$

$$2 + (2 + j6)I_2 - jI_1 = 0 \qquad (4)$$

Solving (3) and (4) leads to $\mathbf{I}_2$ = -0.1055 +j0.2975, $\mathbf{V}_{ab}$=-j6$\mathbf{I}_2$ = 1.7853 +0.6332

$$Z_N = \frac{V_{ab}}{1} = \underline{1.894\angle 19.53^o\,\Omega}$$

Chapter 13, Solution 17.

$$Z = -j6 \,//\, Z_o$$

where

$$Z_o = j20 + \frac{144}{j30 - j2 + j5 + 4} = 0.5213 + j15.7$$

$$Z = \frac{-j6xZ_o}{-j6 + Z_o} = \underline{0.1989 - j9.7\Omega}$$

Chapter 13, Solution 18.

Let $\omega = 1.$ $\quad L_1 = 5, L_2 = 20, M = k\sqrt{L_1 L_2} = 0.5x10 = 5$

We replace the transformer by its equivalent T-section.

$L_a = L_1 - (-M) = 5 + 5 = 10,$ $\quad L_b = L_1 + M = 20 + 5 = 25,$ $\quad L_c = -M = -5$

We find $\mathbf{Z}_{Th}$ using the circuit below.

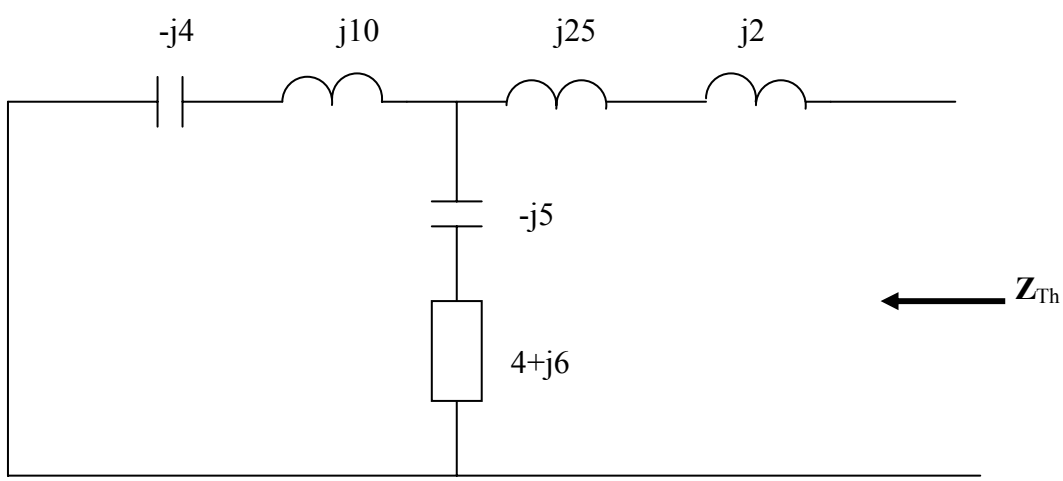

$$Z_{Th} = j27 + (4 + j)//(j6) = j27 + \frac{j6(4 + j)}{4 + j7} = \underline{2.215 + j29.12\Omega}$$

We find $\mathbf{V}_{Th}$ by looking at the circuit below.

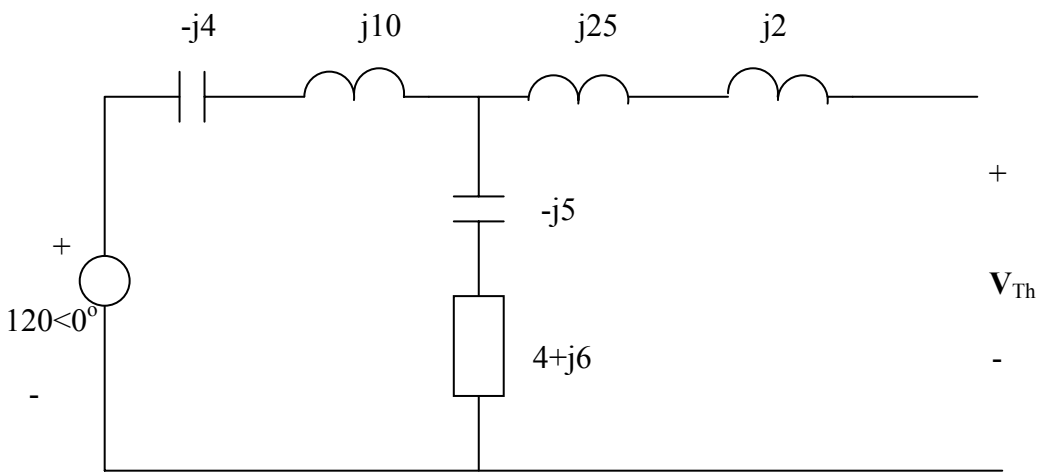

$$V_{Th} = \frac{4+j}{4+j+j6}(120) = \underline{61.37\angle -46.22^o \text{ V}}$$

Chapter 13, Solution 19.

Let $\omega = 1$. $\quad L_a = L_1 - (-M) = 40 + 25 = 65\text{ H}$

$$L_b = L_2 + M = 30 + 25 = 55\text{ H}, \qquad \text{L}_\text{C} = -M = -25$$

Thus, the T-section is as shown below.

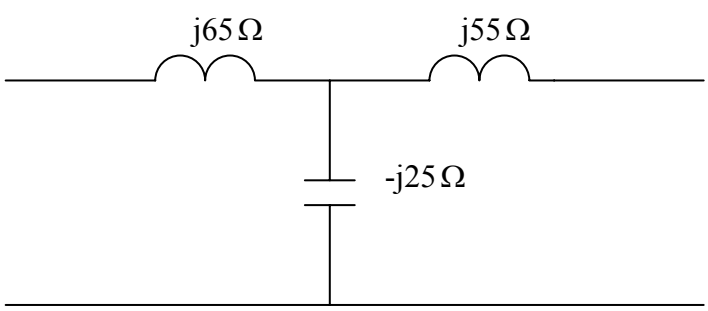

Chapter 13, Solution 20.

Transform the current source to a voltage source as shown below.

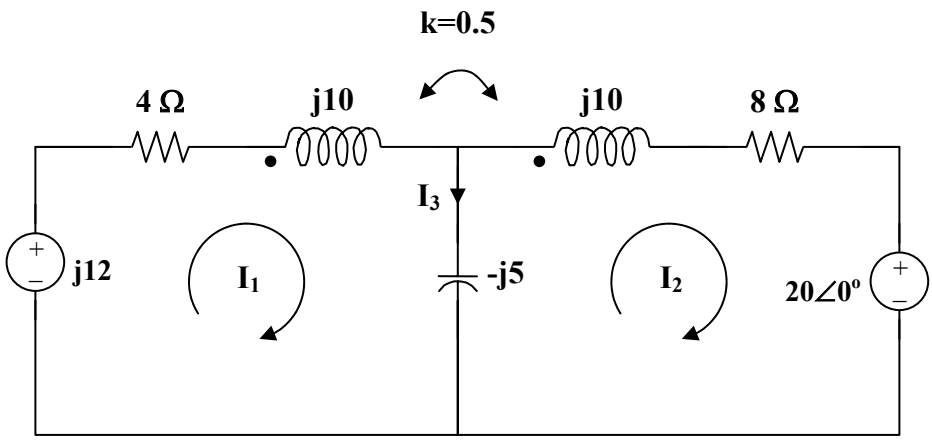

$$k = M/\sqrt{L_1L_2} \quad \text{or} \quad M = k\sqrt{L_1L_2}$$

$$\omega M = k\sqrt{\omega L_1 \omega L_2} = 0.5(10) = 5$$

For mesh 1, $\quad j12 = (4 + j10 - j5)I_1 + j5I_2 + j5I_2 = (4 + j5)I_1 + j10I_2 \qquad (1)$

For mesh 2, $\quad 0 = 20 + (8 + j10 - j5)I_2 + j5I_1 + j5I_1$

$$-20 = +j10I_1 + (8 + j5)I_2 \qquad (2)$$

From (1) and (2), $\quad \begin{bmatrix} j12 \\ 20 \end{bmatrix} = \begin{bmatrix} 4 + j5 & +j10 \\ +j10 & 8 + j5 \end{bmatrix} \begin{bmatrix} I_1 \\ I_2 \end{bmatrix}$

$$\Delta = 107 + j60, \quad \Delta_1 = -60 - j296, \quad \Delta_2 = 40 - j100$$

$$I_1 = \Delta_1/\Delta = \underline{\mathbf{2.462\angle 72.18°\ A}}$$

$$I_2 = \Delta_2/\Delta = \underline{\mathbf{0.878\angle -97.48°\ A}}$$

$$I_3 = I_1 - I_2 = \underline{\mathbf{3.329\angle 74.89°\ A}}$$

$$i_1 = 2.462\cos(1000t + 72.18°)\ \text{A}$$

$$i_2 = 0.878\cos(1000t - 97.48°)\ \text{A}$$

At $t = 2$ ms, $1000t = 2$ rad $= 114.6°$

$$i_1 = 0.9736\cos(114.6° + 143.09°) = -2.445$$

$$i_2 = 2.53\cos(114.6° + 153.61°) = -0.8391$$

The total energy stored in the coupled coils is

$$w = 0.5L_1i_1^2 + 0.5L_2i_2^2 - Mi_1i_2$$

Since $\omega L_1 = 10$ and $\omega = 1000$, $L_1 = L_2 = 10$ mH, $M = 0.5L_1 = 5$mH

$$w = 0.5(10)(-2.445)^2 + 0.5(10)(-0.8391)^2 - 5(-2.445)(-0.8391)$$

$$\mathbf{w} = \underline{43.67 \text{ mJ}}$$

Chapter 13, Solution 21.

For mesh 1, $36\angle 30° = (7 + j6)I_1 - (2 + j)I_2$ (1)

For mesh 2, $0 = (6 + j3 - j4)I_2 - 2I_1\ jI_1 = -(2 + j)I_1 + (6 - j)I_2$ (2)

Placing (1) and (2) into matrix form, $\begin{bmatrix} 36\angle 30° \\ 0 \end{bmatrix} = \begin{bmatrix} 7 + j6 & -2 - j \\ -2 - j & 6 - j \end{bmatrix} \begin{bmatrix} I_1 \\ I_2 \end{bmatrix}$

$\Delta = 48 + j35 = 59.41\angle 36.1°$, $\Delta_1 = (6 - j)36\angle 30° = 219\angle 20.54°$

$\Delta_2 = (2 + j)36\angle 30° = 80.5\angle 56.56°$, $I_1 = \Delta_1/\Delta = 3.69\angle -15.56°$, $I_2 = \Delta_2/\Delta = 1.355\angle 20.46°$

Power absorbed fy the 4-ohm resistor, $= 0.5(I_2)^2 4 = 2(1.355)^2 =$ **<u>3.672 watts</u>**

Chapter 13, Solution 22.

With more complex mutually coupled circuits, it may be easier to show the effects of the coupling as sources in terms of currents that enter or leave the dot side of the coil. Figure 13.85 then becomes,

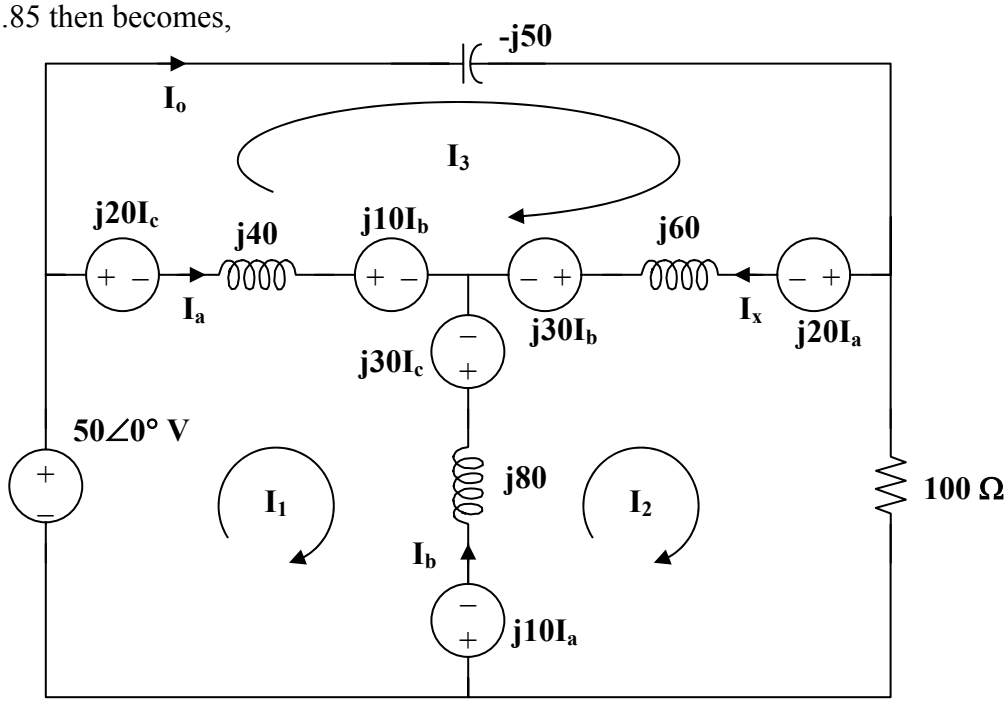

Note the following,

$$I_a = I_1 - I_3$$
$$I_b = I_2 - I_1$$
$$I_c = I_3 - I_2$$

and $I_o = I_3$

Now all we need to do is to write the mesh equations and to solve for I_o.

Loop # 1,

$$-50 + j20(I_3 - I_2)\ j\,40(I_1 - I_3) + j10(I_2 - I_1) - j30(I_3 - I_2) + j80(I_1 - I_2) - j10(I_1 - I_3) = 0$$

$$j100I_1 - j60I_2 - j40I_3 = 50$$

Multiplying everything by (1/j10) yields $10I_1 - 6I_2 - 4I_3 = -j5$ (1)

Loop # 2,

$$j10(I_1 - I_3) + j80(I_2 - I_1) + j30(I_3 - I_2) - j30(I_2 - I_1) + j60(I_2 - I_3) - j20(I_1 - I_3) + 100I_2 = 0$$

$$-j60I_1 + (100 + j80)I_2 - j20I_3 = 0 \qquad (2)$$

Loop # 3,

$$-j50I_3 + j20(I_1 - I_3) + j60(I_3 - I_2) + j30(I_2 - I_1) - j10(I_2 - I_1) + j40(I_3 - I_1) - j20(I_3 - I_2) = 0$$

$$-j40I_1 - j20I_2 + j10I_3 = 0$$

Multiplying by (1/j10) yields, $-4I_1 - 2I_2 + I_3 = 0$ (3)

Multiplying (2) by (1/j20) yields $-3I_1 + (4 - j5)I_2 - I_3 = 0$ (4)

Multiplying (3) by (1/4) yields $-I_1 - 0.5I_2 - 0.25I_3 = 0$ (5)

Multiplying (4) by (-1/3) yields $I_1 - ((4/3) - j(5/3))I_2 + (1/3)I_3 = -j0.5$ (7)

Multiplying [(6)+(5)] by 12 yields $(-22 + j20)I_2 + 7I_3 = 0$ (8)

Multiplying [(5)+(7)] by 20 yields $-22I_2 - 3I_3 = -j10$ (9)

(8) leads to $I_2 = -7I_3/(-22 + j20) = 0.2355\angle 42.3^o = (0.17418+j0.15849)I_3$ (10)

(9) leads to $I_3 = (j10 - 22I_2)/3$, substituting (1) into this equation produces,

$$I_3 = j3.333 + (-1.2273 - j1.1623)I_3$$

or $I_3 = I_o =$ **$\underline{1.3040\angle 63^o \text{ amp.}}$**

Chapter 13, Solution 23.

$\omega = 10$

0.5 H converts to $j\omega L_1 = j5$ ohms

1 H converts to $j\omega L_2 = j10$ ohms

0.2 H converts to $j\omega M = j2$ ohms

25 mF converts to $1/(j\omega C) = 1/(10x25x10^{-3}) = -j4$ ohms

The frequency-domain equivalent circuit is shown below.

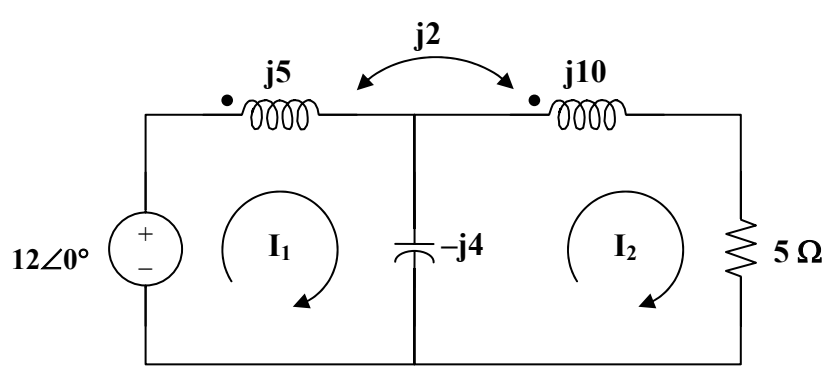

For mesh 1, $12 = (j5 - j4)I_1 + j2I_2 - (-j4)I_2$

$$-j2 = I_1 + 6I_2 \qquad (1)$$

For mesh 2, $0 = (5 + j10)I_2 + j2I_1 - (-j4)I_1$

$$0 = (5 + j10)I_2 + j6I_1 \qquad (2)$$

From (1), $I_1 = -j12 - 6I_2$

Substituting this into (2) produces,

$$I_2 = 72/(-5 + j26) = 2.7194\angle -100.89°$$

$$I_1 = -j12 - 6\,I_2 = -j12 - 163.17\angle -100.89 = 5.068\angle 52.54°$$

Hence, $i_1 =$ **<u>5.068cos(10t + 52.54°) A</u>**, $i_2 =$ **<u>2.719cos(10t – 100.89°) A</u>**.

At $t = 15$ ms, $10t = 10\text{x}15\text{x}10^{-3}\ 0.15$ rad $= 8.59°$

$$i_1 = 5.068\cos(61.13°) = 2.446$$

$$i_2 = 2.719\cos(-92.3°) = -0.1089$$

$$w = 0.5(5)(2.446)^2 + 0.5(1)(-0.1089)^2 - (0.2)(2.446)(-0.1089) = \underline{\mathbf{15.02\ J}}$$

Chapter 13, Solution 24.

(a) $k = M/\sqrt{L_1L_2} = 1/\sqrt{4\text{x}2} =$ **<u>0.3535</u>**

(b) $\omega = 4$

1/4 F leads to $1/(j\omega C) = -j/(4\text{x}0.25) = -j$

$1||(-j) = -j/(1 - j) = 0.5(1 - j)$

1 H produces $j\omega M = j4$

4 H produces j16

2 H becomes j8

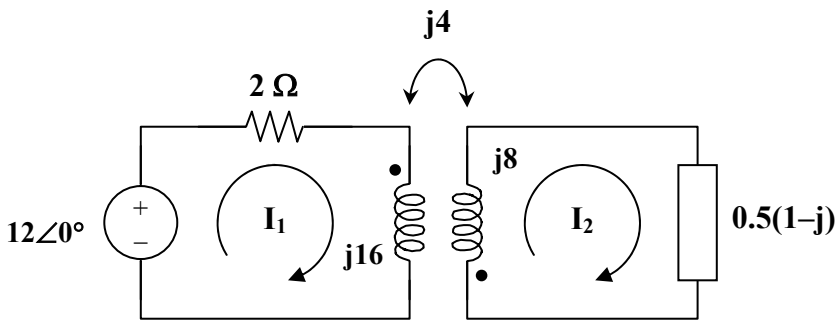

$$12 = (2 + j16)I_1 + j4I_2$$

$$\text{or} \qquad 6 = (1 + j8)I_1 + j2I_2 \qquad (1)$$

$$0 = (j8 + 0.5 - j0.5)I_2 + j4I_1 \;\text{ or }\; I_1 = (0.5 + j7.5)I_2/(-j4) \qquad (2)$$

Substituting (2) into (1),

$$24 = (-11.5 - j51.5)I_2 \;\text{ or }\; I_2 = -24/(11.5 + j51.5) = -0.455\angle -77.41°$$

$$V_o = I_2(0.5)(1 - j) = 0.3217\angle 57.59°$$

$$v_o = \underline{\mathbf{321.7\cos(4t + 57.6°)\ mV}}$$

(c) From (2), $I_1 = (0.5 + j7.5)I_2/(-j4) = 0.855\angle -81.21°$

$$i_1 = 0.885\cos(4t - 81.21°)\text{ A},\; i_2 = -0.455\cos(4t - 77.41°)\text{ A}$$

At t = 2s,

$$4t = 8\text{ rad} = 98.37°$$

$$i_1 = 0.885\cos(98.37° - 81.21°) = 0.8169$$

$$i_2 = -0.455\cos(98.37° - 77.41°) = -0.4249$$

$$w = 0.5L_1i_1^2 + 0.5L_2i_2^2 + Mi_1i_2$$

$$= 0.5(4)(0.8169)^2 + 0.5(2)(-.4249)^2 + (1)(0.1869)(-0.4249) = \underline{\mathbf{1.168\ J}}$$

Chapter 13, Solution 25.

$$m = k\sqrt{L_1L_2} = 0.5 \text{ H}$$

We transform the circuit to frequency domain as shown below.

12sin2t converts to $12\angle 0°$, $\omega = 2$

0.5 F converts to $1/(j\omega C) = -j$

2 H becomes $j\omega L = j4$

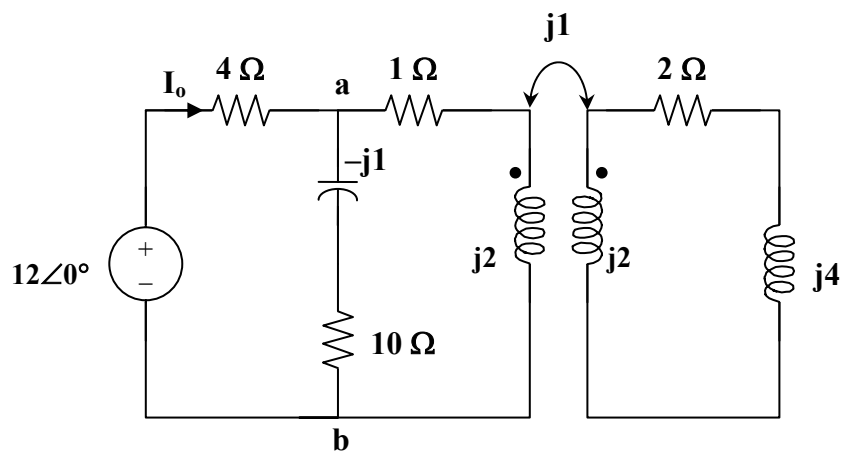

Applying the concept of reflected impedance,

$$Z_{ab} = (2 - j)||(1 + j2 + (1)^2/(j2 + 3 + j4))$$

$$= (2 - j)||(1 + j2 + (3/45) - j6/45)$$

$$= (2 - j)||(1 + j2 + (3/45) - j6/45)$$

$$= (2 - j)||(1.0667 + j1.8667)$$

$$=(2 - j)(1.0667 + j1.8667)/(3.0667 + j0.8667) = 1.5085\angle 17.9° \text{ ohms}$$

$$I_o = 12\angle 0°/(Z_{ab} + 4) = 12/(5.4355 + j0.4636) = 2.2\angle -4.88°$$

$$i_o = \underline{\mathbf{2.2sin(2t - 4.88°)\ A}}$$

Chapter 13, Solution 26.

$$M = k\sqrt{L_1L_2}$$

$$\omega M = k\sqrt{\omega L_1 \omega L_2} = 0.6\sqrt{20x40} = 17$$

The frequency-domain equivalent circuit is shown below.

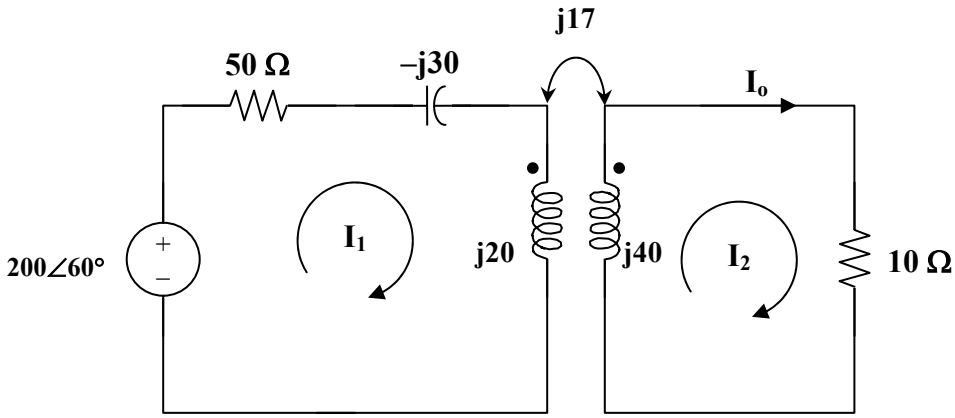

For mesh 1,

$$200\angle 60° = (50 - j30 + j20)I_1 + j17I_2 = (50 - j10)I_1 + j17I_2 \qquad (1)$$

For mesh 2,

$$0 = (10 + j40)I_2 + j17I_1 \qquad (2)$$

In matrix form, $$\begin{bmatrix} 200\angle 60° \\ 0 \end{bmatrix} = \begin{bmatrix} 50 - j10 & j17 \\ j17 & 10 + j40 \end{bmatrix} \begin{bmatrix} I_1 \\ I_2 \end{bmatrix}$$

$\Delta = 900 + j100$, $\Delta_1 = 2000\angle 60°(1 + j4) = 8246.2\angle 136°$, $\Delta_2 = 3400\angle -30°$

$I_2 = \Delta_2/\Delta = 3.755\angle -36.34°$

$I_o = I_2 =$ **<u>3.755∠–36.34° A</u>**

Switching the dot on the winding on the right only reverses the direction of I_o. This can be seen by looking at the resulting value of Δ_2 which now becomes $3400\angle 150°$. Thus,

$I_o =$ **<u>3.755∠143.66° A</u>**

Chapter 13, Solution 27.

$Z_{in} = -j4 + j5 + 9/(12 + j6) = 0.6 + j.07 = 0.922\angle 49.4°$

$I_1 = 12\angle 0°/0.922\angle 49.4° =$ **$\underline{13\angle -49.4°\ A}$**

Chapter 13, Solution 28.

We find Z_{Th} by replacing the 20-ohm load with a unit source as shown below.

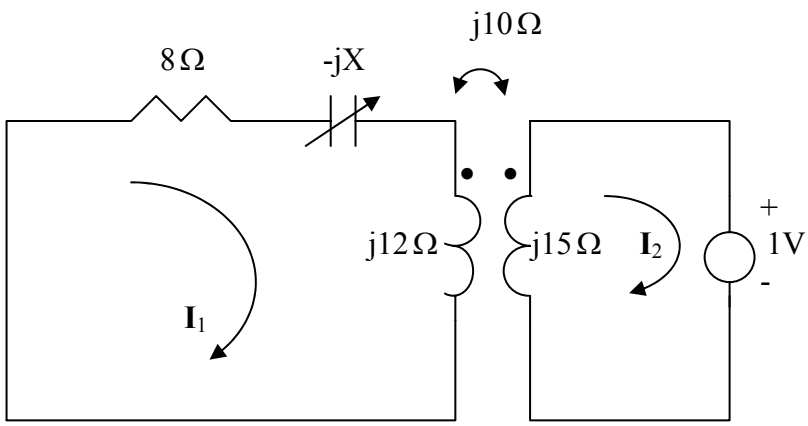

For mesh 1, $0 = (8 - jX + j12)I_1 - j10I_2$ (1)

For mesh 2, $1 + j15I_2 - j10I_1 = 0 \longrightarrow I_1 = 1.5I_2 - 0.1j$ (2)

Substituting (2) into (1) leads to

$$I_2 = \frac{-1.2 + j0.8 + 0.1X}{12 + j8 - j1.5X}$$

$$Z_{Th} = \frac{1}{-I_2} = \frac{12 + j8 - j1.5X}{1.2 - j0.8 - 0.1X}$$

$$|Z_{Th}| = 20 = \frac{\sqrt{12^2 + (8 - 1.5X)^2}}{\sqrt{(1.2 - 0.1X)^2 + 0.8^2}} \longrightarrow 0 = 1.75X^2 + 72X - 624$$

Solving the quadratic equation yields **$\underline{X = 6.425}$**

Chapter 13, Solution 29.

30 mH becomes $j\omega L = j30x10^{-3}x10^{3} = j30$

50 mH becomes j50

Let $X = \omega M$

Using the concept of reflected impedance,

$Z_{in} = 10 + j30 + X^2/(20 + j50)$

$I_1 = V/Z_{in} = 165/(10 + j30 + X^2/(20 + j50))$

$p = 0.5|I_1|^2(10) = 320$ leads to $|I_1|^2 = 64$ or $|I_1| = 8$

$8 = |165(20 + j50)/(X^2 + (10 + j30)(20 + j50))|$

$= |165(20 + j50)/(X^2 - 1300 + j1100)|$

or $64 = 27225(400 + 2500)/((X^2 - 1300)^2 + 1{,}210{,}000)$

$(X^2 - 1300)^2 + 1{,}210{,}000 = 1{,}233{,}633$

$X = 33.86$ or 38.13

If $X = 38.127 = \omega M$

$M = 38.127$ mH

$k = M/\sqrt{L_1L_2} = 38.127/\sqrt{30x50} = \underline{\mathbf{0.984}}$

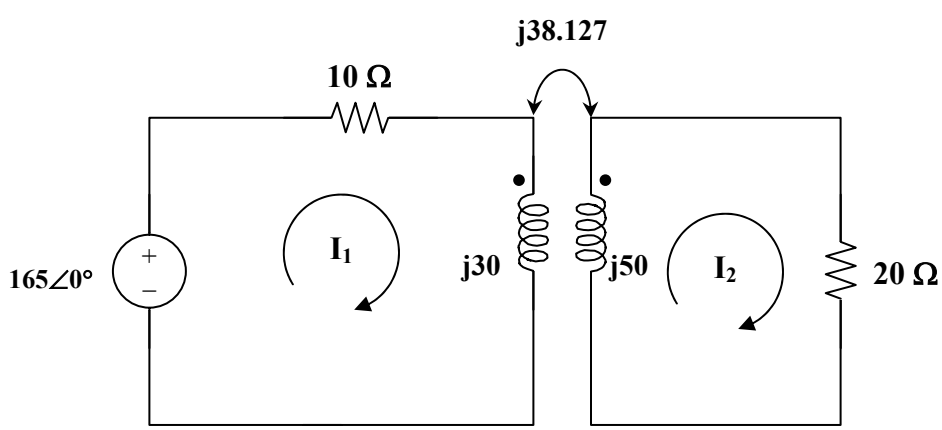

$165 = (10 + j30)I_1 - j38.127I_2$ (1)

$0 = (20 + j50)I_2 - j38.127I_1$ (2)

In matrix form, $\begin{bmatrix} 165 \\ 0 \end{bmatrix} = \begin{bmatrix} 10 + j30 & -j38.127 \\ -j38.127 & 20 + j50 \end{bmatrix} \begin{bmatrix} I_1 \\ I_2 \end{bmatrix}$

$\Delta = 154 + j1100 = 1110.73\angle 82.03°$, $\Delta_1 = 888.5\angle 68.2°$, $\Delta_2 = j6291$

$I_1 = \Delta_1/\Delta = 8\angle -13.81°$, $I_2 = \Delta_2/\Delta = 5.664\angle 7.97°$

$i_1 = 8\cos(1000t - 13.83°)$, $i_2 = 5.664\cos(1000t + 7.97°)$

At $t = 1.5$ ms, $1000t = 1.5$ rad $= 85.94°$

$i_1 = 8\cos(85.94° - 13.83°) = 2.457$

$i_2 = 5.664\cos(85.94° + 7.97°) = -0.3862$

$w = 0.5L_1i_1^2 + 0.5L_2i_2^2 + Mi_1i_2$

$= 0.5(30)(2.547)^2 + 0.5(50)(-0.3862)^2 - 38.127(2.547)(-0.3862)$

$=$ **<u>130.51 mJ</u>**

Chapter 13, Solution 30.

(a) $Z_{in} = j40 + 25 + j30 + (10)^2/(8 + j20 - j6)$
$= 25 + j70 + 100/(8 + j14) =$ **<u>(28.08 + j64.62) ohms</u>**

(b) $j\omega L_a = j30 - j10 = j20$, $j\omega L_b = j20 - j10 = j10$, $j\omega L_c = j10$

Thus the Thevenin Equivalent of the linear transformer is shown below.

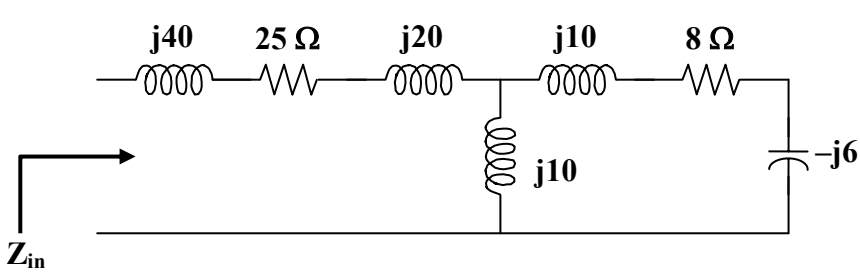

$Z_{in} = j40 + 25 + j20 + j10||(8 + j4) = 25 + j60 + j10(8 + j4)/(8 + j14)$

$=$ **<u>(28.08 + j64.62) ohms</u>**

Chapter 13, Solution 31.

(a) $L_a = L_1 - M = \underline{\mathbf{10\ H}}$

$L_b = L_2 - M = \underline{\mathbf{15\ H}}$

$L_c = M = \underline{\mathbf{5\ H}}$

(b) $L_1L_2 - M^2 = 300 - 25 = 275$

$L_A = (L_1L_2 - M^2)/(L_1 - M) = 275/15 = \underline{\mathbf{18.33\ H}}$

$L_B = (L_1L_2 - M^2)/(L_1 - M) = 275/10 = \underline{\mathbf{27.5\ H}}$

$L_C = (L_1L_2 - M^2)/M = 275/5 = \underline{\mathbf{55\ H}}$

Chapter 13, Solution 32.

We first find Z_{in} for the second stage using the concept of reflected impedance.

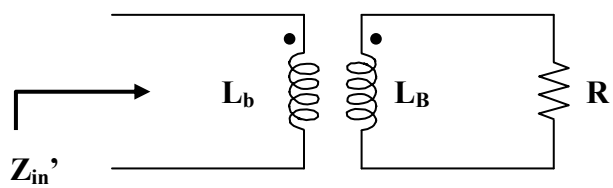

$$Z_{in}' = j\omega L_b + \omega^2 M_b^2/(R + j\omega L_b) = (j\omega L_b R - \omega^2 L_b^2 + \omega^2 M_b^2)/(R + j\omega L_b) \qquad (1)$$

For the first stage, we have the circuit below.

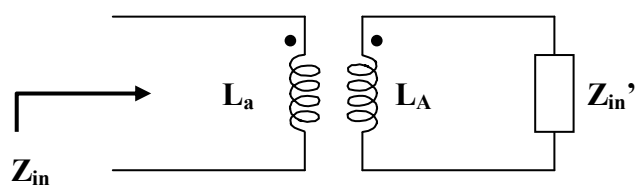

$$Z_{in} = j\omega L_a + \omega^2 M_a^2/(j\omega L_a + Z_{in})$$

$$= (-\omega^2 L_a^2 + \omega^2 M_a^2 + j\omega L_a Z_{in})/(j\omega L_a + Z_{in}) \qquad (2)$$

Substituting (1) into (2) gives,

$$= \frac{-\omega^2 L_a^2 + \omega^2 M_a^2 + j\omega L_a \dfrac{(j\omega L_b R - \omega^2 L_b^2 + \omega^2 M_b^2)}{R + j\omega L_b}}{j\omega L_a + \dfrac{j\omega L_b R - \omega^2 L_b^2 + \omega^2 M_b^2}{R + j\omega L_b}}$$

$$= \frac{-R\omega^2 L_a{}^2 + \omega^2 M_a{}^2 R - j\omega^3 L_b L_a + j\omega^3 L_b M_a{}^2 + j\omega L_a(j\omega L_b R - \omega^2 L_b{}^2 + \omega^2 M_b{}^2)}{j\omega RLa - \omega^2 L_a L_b + j\omega L_b R - \omega^2 L_a{}^2 + \omega^2 M_b{}^2}$$

$$Z_{in} = \frac{\boldsymbol{\omega^2 R(L_a{}^2 + L_a L_b - M_a{}^2) + j\omega^3(L_a{}^2 L_b + L_a L_b{}^2 - L_a M_b{}^2 - L_b M_a{}^2)}}{\boldsymbol{\omega^2(L_a L_b + L_b{}^2 - M_b{}^2) - j\omega R(L_a + L_b)}}$$

Chapter 13, Solution 33.

$$Z_{in} = 10 + j12 + (15)^2/(20 + j\,40 - j5) = 10 + j12 + 225/(20 + j35)$$

$$= 10 + j12 + 225(20 - j35)/(400 + 1225)$$

$$= \underline{(12.769 + j7.154)\ \text{ohms}}$$

Chapter 13, Solution 34.

Insert a 1-V voltage source at the input as shown below.

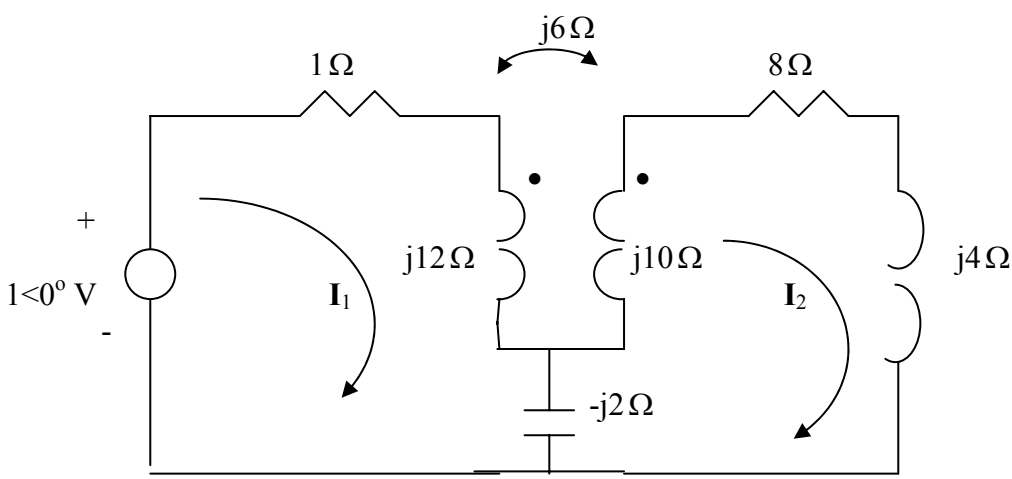

For loop 1,

$$1 = (1 + j10)I_1 - j4I_2 \qquad (1)$$

For loop 2,

$$0 = (8 + j4 + j10 - j2)I_2 + j2I_1 - j6I_1 \quad \longrightarrow \quad 0 = -jI_1 + (2 + j3)I_2 \qquad (2)$$

Solving (1) and (2) leads to $\mathbf{I}_1$=0.019 –j0.1068

$$Z = \frac{1}{I_1} = 1.6154 + j9.077 = \underline{9.219\angle 79.91^o\,\Omega}$$

Alternatively, an easier way to obtain **Z** is to replace the transformer with its equivalent T circuit and use series/parallel impedance combinations. This leads to exactly the same result.

Chapter 13, Solution 35.

For mesh 1, $16 = (10 + j4)I_1 + j2I_2$ (1)

For mesh 2, $0 = j2I_1 + (30 + j26)I_2 - j12I_3$ (2)

For mesh 3, $0 = -j12I_2 + (5 + j11)I_3$ (3)

We may use MATLAB to solve (1) to (3) and obtain

$$I_1 = 1.3736 - j0.5385 = \underline{1.4754\angle -21.41^o \text{ A}}$$
$$I_2 = -0.0547 - j0.0549 = \underline{0.0775\angle -134.85^o \text{ A}}$$
$$I_3 = -0.0268 - j0.0721 = \underline{0.077\angle -110.41^o \text{ A}}$$

Chapter 13, Solution 36.

Following the two rules in section 13.5, we obtain the following:

(a) V_2/V_1 = **–n**, I_2/I_1 = **–1/n** (n = V_2/V_1)

(b) V_2/V_1 = **–n**, I_2/I_1 = **–1/n**

(c) V_2/V_1 = **n**, I_2/I_1 = **1/n**

(d) V_2/V_1 = **n**, I_2/I_1 = **–1/n**

Chapter 13, Solution 37.

(a) $n = \dfrac{V_2}{V_1} = \dfrac{2400}{480} = \underline{5}$

(b) $S_1 = I_1V_1 = S_2 = I_2V_2 = 50{,}000 \quad \longrightarrow \quad I_1 = \dfrac{50{,}000}{480} = \underline{104.17\text{ A}}$

(c) $I_2 = \dfrac{50{,}000}{2400} = \underline{20.83\text{ A}}$

Chapter 13, Solution 38.

$Z_{in} = Z_p + Z_L/n^2, \quad n = v_2/v_1 = 230/2300 = 0.1$

$v_2 = 230\text{ V}, \; s_2 = v_2I_2^*$

$I_2^* = s_2/v_2 = 17.391\angle{-53.13°}$ or $I_2 = 17.391\angle 53.13°$ A

$Z_L = v_2/I_2 = 230\angle 0°/17.391\angle 53.13° = 13.235\angle{-53.13°}$

$Z_{in} = 2\angle 10° + 1323.5\angle{-53.13°}$

$= 1.97 + j0.3473 + 794.1 - j1058.8$

$Z_{in} =$ **$\underline{1.324\angle{-53.05°}\text{ kohms}}$**

Chapter 13, Solution 39.

Referred to the high-voltage side,

$Z_L = (1200/240)^2(0.8\angle 10°) = 20\angle 10°$

$Z_{in} = 60\angle{-30°} + 20\angle 10° = 76.4122\angle{-20.31°}$

$I_1 = 1200/Z_{in} = 1200/76.4122\angle{-20.31°} =$ **$\underline{15.7\angle 20.31°\text{ A}}$**

Since $S = I_1v_1 = I_2v_2, \; I_2 = I_1v_1/v_2$

$= (1200/240)(15.7\angle 20.31°) =$ **$\underline{78.5\angle 20.31°\text{ A}}$**

Chapter 13, Solution 40.

$$n = \frac{N_2}{N_1} = \frac{500}{2000} = \frac{1}{4}, \qquad n = \frac{V_2}{V_1} \qquad \longrightarrow \qquad V_2 = nV_1 = \frac{1}{4}(240) = 60\text{ V}$$

$$P = \frac{V^2}{R} = \frac{60^2}{12} = \underline{300\text{ W}}$$

Chapter 13, Solution 41.

We reflect the 2-ohm resistor to the primary side.

$Z_{in} = 10 + 2/n^2, \quad n = -1/3$

Since both I_1 and I_2 enter the dotted terminals, $Z_{in} = 10 + 18 = 28$ ohms

$I_1 = 14\angle 0°/28 =$ **<u>0.5 A</u>** and $I_2 = I_1/n = 0.5/(-1/3) =$ **<u>–1.5 A</u>**

Chapter 13, Solution 42.

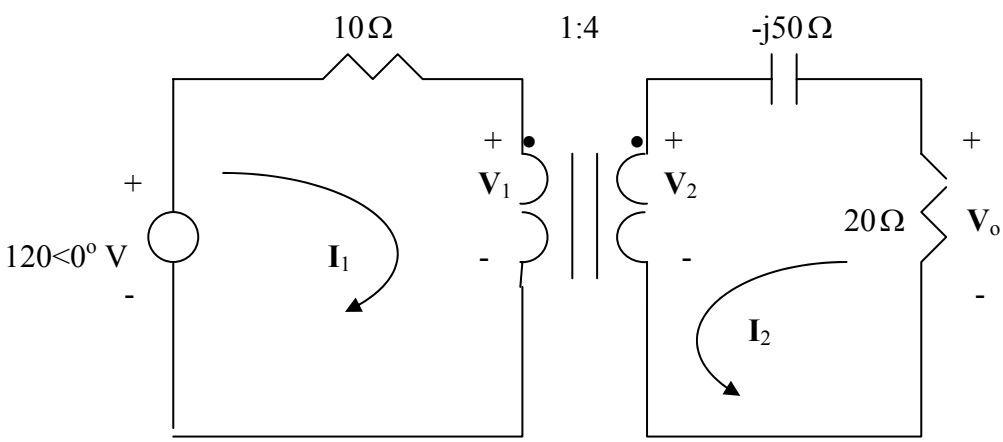

Applying mesh analysis,

$$120 = 10I_1 + V_1 \qquad (1)$$

$$0 = (20 - j50)I_2 + V_2 \qquad (2)$$

At the terminals of the transformer,

$$\frac{V_2}{V_1} = n = 4 \quad \longrightarrow \quad V_2 = 4V_1 \qquad (3)$$

$$\frac{I_2}{I_1} = -\frac{1}{n} = -\frac{1}{4} \quad \longrightarrow \quad I_1 = -4I_2 \qquad (4)$$

Substituting (3) and (4) into (1) gives $120 = -40I_2 + 0.25V_2$ (5)

Solving (2) and (5) yields $I_2 = -2.4756 - j0.6877$

$$V_o = -20I_2 = \underline{51.39\angle 15.52^o \text{ V}}$$

Chapter 13, Solution 43.

Transform the two current sources to voltage sources, as shown below.

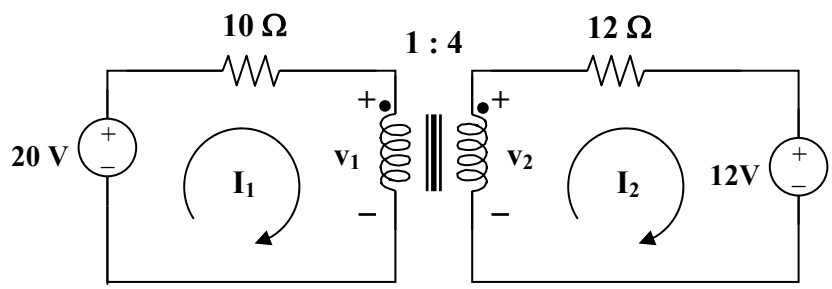

Using mesh analysis, $-20 + 10I_1 + v_1 = 0$

$$20 = v_1 + 10I_1 \qquad (1)$$

$$12 + 12I_2 - v_2 = 0 \text{ or } 12 = v_2 - 12I_2 \qquad (2)$$

At the transformer terminal, $v_2 = nv_1 = 4v_1$ (3)

$$I_1 = nI_2 = 4I_2 \qquad (4)$$

Substituting (3) and (4) into (1) and (2), we get,

$$20 = v_1 + 40I_2 \qquad (5)$$

$$12 = 4v_1 - 12I_2 \qquad (6)$$

Solving (5) and (6) gives $v_1 = \underline{\mathbf{4.186\ V}}$ and $v_2 = 4v = \underline{\mathbf{16.744\ V}}$

Chapter 13, Solution 44.

We can apply the superposition theorem. Let $i_1 = i_1' + i_1''$ and $i_2 = i_2' + i_2''$ where the single prime is due to the DC source and the double prime is due to the AC source. Since we are looking for the steady-state values of i_1 and i_2,

$$i_1' = i_2' = 0.$$

For the AC source, consider the circuit below.

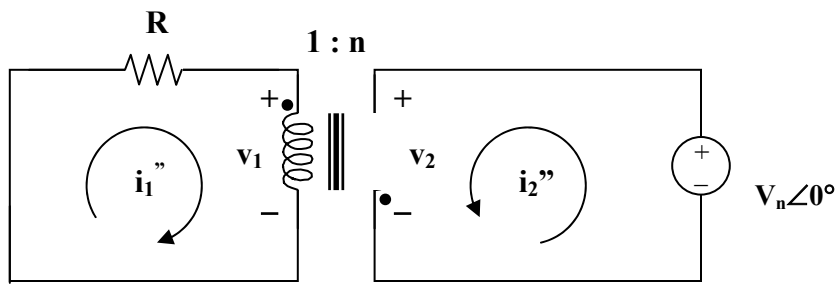

$$v_2/v_1 = -n, \quad I_2''/I_1'' = -1/n$$

But $v_2 = v_m$, $v_1 = -v_m/n$ or $I_1'' = v_m/(Rn)$

$$I_2'' = -I_1''/n = -v_m/(Rn^2)$$

Hence, $i_1(t) = \underline{\mathbf{(v_m/Rn)\cos\omega t\ A}}$, and $i_2(t) = \underline{\mathbf{(-v_m/(n^2R))\cos\omega t\ A}}$

Chapter 13, Solution 45.

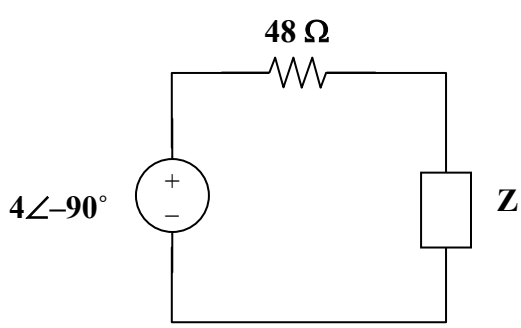

$$Z_L = 8 - \frac{j}{\omega C} = 8 - j4, \ n = 1/3$$

$$Z = \frac{Z_L}{n^2} = 9Z_L = 72 - j36$$

$$I = \frac{4\angle -90°}{48 + 72 - j36} = \frac{4\angle -90°}{125.28\angle -16.7°} = 0.03193\angle -73.3°$$

We now have some choices, we can go ahead and calculate the current in the second loop and calculate the power delivered to the 8-ohm resistor directly or we can merely say that the power delivered to the equivalent resistor in the primary side must be the same as the power delivered to the 8-ohm resistor. Therefore,

$$P_{8\Omega} = \left|\frac{I}{2}^2\right| 72 = 0.5098\text{x}10^{-3}72 = \underline{\mathbf{36.71\ mW}}$$

The student is encouraged to calculate the current in the secondary and calculate the power delivered to the 8-ohm resistor to verify that the above is correct.

Chapter 13, Solution 46.

(a) Reflecting the secondary circuit to the primary, we have the circuit shown below.

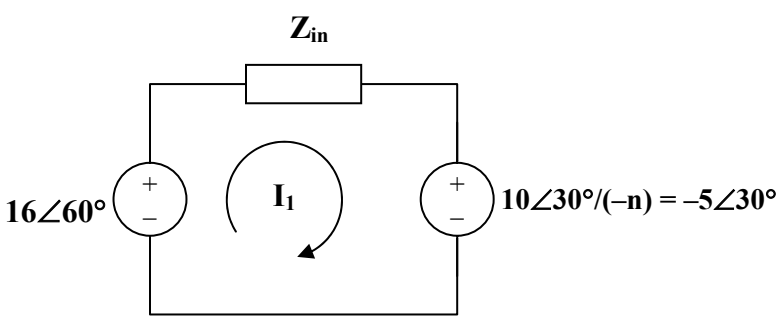

$Z_{in} = 10 + j16 + (1/4)(12 - j8) = 13 + j14$

$-16\angle 60° + Z_{in}I_1 - 5\angle 30° = 0$ or $I_1 = (16\angle 60° + 5\angle 30°)/(13 + j14)$

Hence, $I_1 = \underline{\mathbf{1.072\angle 5.88°\ A}}$, and $I_2 = -0.5I_1 = \underline{\mathbf{0.536\angle 185.88°\ A}}$

(b) Switching a dot will not effect Z_{in} but will effect I_1 and I_2.

$I_1 = (16\angle 60° - 5\angle 30°)/(13 + j14) = \underline{\mathbf{0.625\ \angle 25\ A}}$

and $I_2 = 0.5I_1 = \underline{\mathbf{0.3125\angle 25°\ A}}$

Chapter 13, Solution 47.

0.02 F becomes $1/(j\omega C) = 1/(j5x0.02) = -j10$

We apply mesh analysis to the circuit shown below.

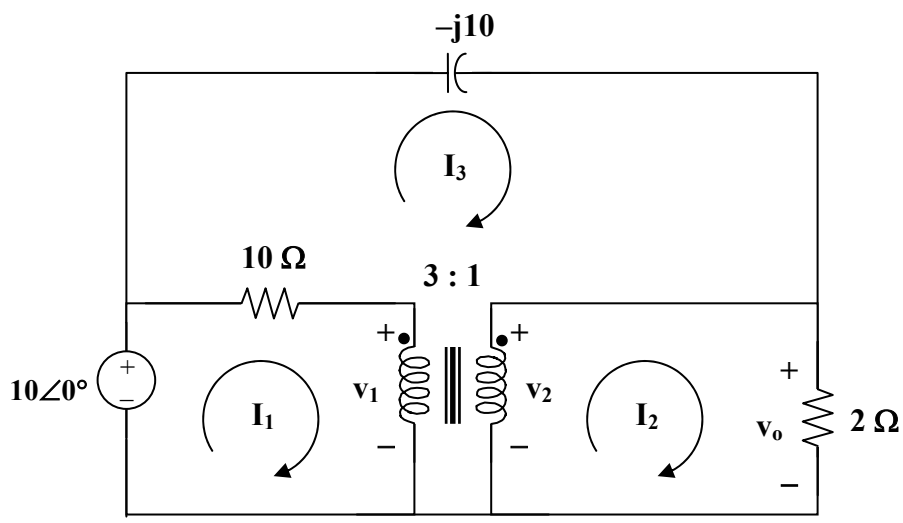

For mesh 1, $10 = 10I_1 - 10I_3 + v_1$ (1)

For mesh 2, $v_2 = 2I_2 = v_o$ (2)

For mesh 3, $0 = (10 - j10)I_3 - 10I_1 + v_2 - v_1$ (3)

At the terminals, $v_2 = nv_1 = v_1/3$ (4)

$I_1 = nI_2 = I_2/3$ (5)

From (2) and (4), $v_1 = 6I_2$ (6)

Substituting this into (1), $10 = 10I_1 - 10I_3$ (7)

Substituting (4) and (6) into (3) yields

$0 = -10I_1 - 4I_2 + 10(1 - j)I_3$ (8)

From (5), (7), and (8)

$$\begin{bmatrix} 1 & -0.333 & 0 \\ 10 & 6 & -10 \\ -10 & -4 & 10 - j10 \end{bmatrix} \begin{bmatrix} I_1 \\ I_2 \\ I_3 \end{bmatrix} = \begin{bmatrix} 0 \\ 10 \\ 0 \end{bmatrix}$$

$$I_2 = \frac{\Delta_2}{\Delta} = \frac{100 - j100}{-20 - j93.33} = 1.482\angle 32.9°$$

$$v_o = 2I_2 = \underline{\mathbf{2.963\angle 32.9°\ V}}$$

(a) Switching the dot on the secondary side effects only equations (4) and (5).

$$v_2 = -v_1/3 \qquad (9)$$

$$I_1 = -I_2/3 \qquad (10)$$

From (2) and (9), $v_1 = -6I_2$

Substituting this into (1),

$$10 = 10I_1 - 10I_3 - 6I_2 = (23 - j5)I_1 \qquad (11)$$

Substituting (9) and (10) into (3),

$$0 = -10I_1 + 4I_2 + 10(1 - j)I_3 \qquad (12)$$

From (10) to (12), we get

$$\begin{bmatrix} 1 & 0.333 & 0 \\ 10 & -6 & -10 \\ -10 & 4 & 10 - j10 \end{bmatrix} \begin{bmatrix} I_1 \\ I_2 \\ I_3 \end{bmatrix} = \begin{bmatrix} 0 \\ 10 \\ 0 \end{bmatrix}$$

$$I_2 = \frac{\Delta_2}{\Delta} = \frac{100 - j100}{-20 + j93.33} = 1.482\angle -147.1°$$

$$v_o = 2I_2 = \underline{\mathbf{2.963\angle -147.1°\ V}}$$

Chapter 13, Solution 48.

We apply mesh analysis.

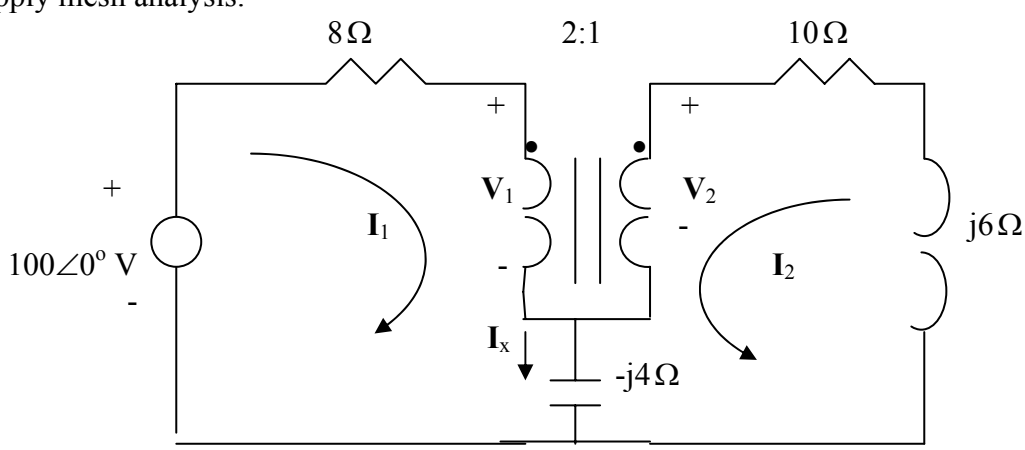

$$100 = (8 - j4)I_1 - j4I_2 + V_1 \qquad (1)$$

$$0 = (10 + j2)I_2 - j4I_1 + V_2 \qquad (2)$$

But

$$\frac{V_2}{V_1} = n = \frac{1}{2} \quad \longrightarrow \quad V_1 = 2V_2 \qquad (3)$$

$$\frac{I_2}{I_1} = -\frac{1}{n} = -2 \quad \longrightarrow \quad I_1 = -0.5I_2 \qquad (4)$$

Substituting (3) and (4) into (1) and (2), we obtain

$$100 = (-4 - j2)I_2 + 2V_2 \qquad (1)a$$
$$0 = (10 + j4)I_2 + V_2 \qquad (2)a$$

Solving (1)a and (2)a leads to $\mathbf{I}_2$ = -3.5503 +j1.4793

$$I_x = I_1 + I_2 = 0.5I_2 = \underline{1.923\angle 157.4^o \text{ A}}$$

Chapter 13, Solution 49.

$$\omega = 2, \quad \frac{1}{20}\text{F} \quad \longrightarrow \quad \frac{1}{j\omega C} = -j10$$

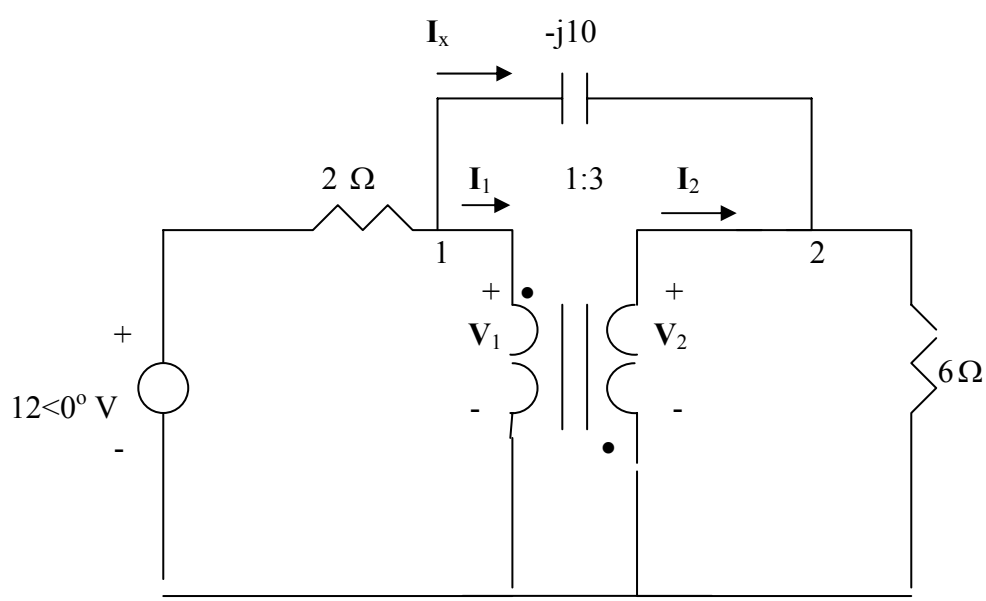

At node 1,

$$\frac{12-V_1}{2}=\frac{V_1-V_2}{-j10}+I_1 \qquad \longrightarrow \qquad 12=2I_1+V_1(1+j0.2)-j0.2V_2 \qquad (1)$$

At node 2,

$$I_2+\frac{V_1-V_2}{-j10}=\frac{V_2}{6} \qquad \longrightarrow \qquad 0=6I_2+j0.6V_1-(1+j0.6)V_2 \qquad (2)$$

At the terminals of the transformer, $V_2=-3V_1, \quad I_2=-\frac{1}{3}I_1$

Substituting these in (1) and (2),

$$12=-6I_2+V_1(1+j0.8), \qquad 0=6I_2+V_1(3+j2.4)$$

Adding these gives $\mathbf{V}_1$=1.829 –j1.463 and

$$I_x=\frac{V_1-V_2}{-j10}=\frac{4V_1}{-j10}=0.937\angle 51.34^o$$

$$\underline{i_x=0.937\cos(2t+51.34^o)\ \text{A}}$$

Chapter 13, Solution 50.

The value of Z_{in} is not effected by the location of the dots since n^2 is involved.

$Z_{in}' = (6-j10)/(n')^2,\ n' = 1/4$

$Z_{in}' = 16(6-j10) = 96-j160$

$Z_{in} = 8+j12+(Z_{in}'+24)/n^2, \quad n = 5$

$Z_{in} = 8+j12+(120-j160)/25 = 8+j12+4.8-j6.4$

Z_{in} = **<u>(12.8 + j5.6) ohms</u>**

Chapter 13, Solution 51.

Let Z_3 = 36 +j18, where Z_3 is reflected to the middle circuit.

$Z_R' = Z_L/n^2 = (12+j2)/4 = 3+j0.5$

$Z_{in} = 5-j2+Z_R'$ = **<u>(8 – j1.5) ohms</u>**

$I_1 = 24\angle 0°/Z_{Th} = 24\angle 0°/(8-j1.5) = 24\angle 0°/8.14\angle -10.62° =$ **<u>8.95∠10.62° A</u>**

Chapter 13, Solution 52.

For maximum power transfer,

$40 = Z_L/n^2 = 10/n^2$ or $n^2 = 10/40$ which yields $n = 1/2 = 0.5$

$I = 120/(40 + 40) = 3/2$

$p = I^2R = (9/4)x40 =$ **<u>90 watts</u>**.

Chapter 13, Solution 53.

(a) The Thevenin equivalent to the left of the transformer is shown below.

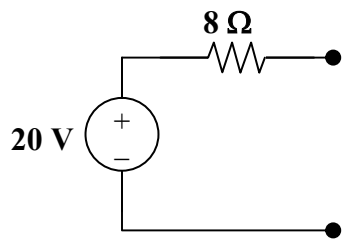

The reflected load impedance is $Z_L' = Z_L/n^2 = 200/n^2$.

For maximum power transfer, $8 = 200/n^2$ produces $n =$ **<u>5</u>**.

(b) If $n = 10$, $Z_L' = 200/10 = 2$ and $I = 20/(8 + 2) = 2$

$p = I^2Z_L' = (2)^2(2) =$ **<u>8 watts</u>**.

Chapter 13, Solution 54.

(a)

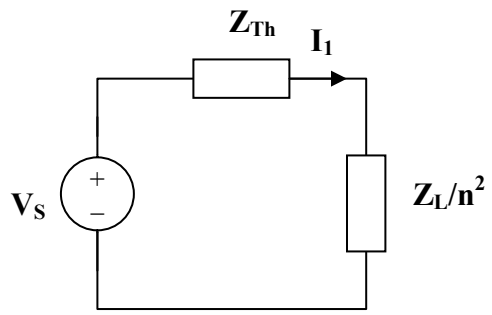

For maximum power transfer,

$$Z_{Th} = Z_L/n^2, \text{ or } n^2 = Z_L/Z_{Th} = 8/128$$

$$n = \underline{\mathbf{0.25}}$$

(b) $I_1 = V_{Th}/(Z_{Th} + Z_L/n^2) = 10/(128 + 128) = \underline{\mathbf{39.06\ mA}}$

(c) $v_2 = I_2 Z_L = 156.24\text{x}8\ \text{mV} = 1.25\ \text{V}$

But $v_2 = nv_1$ therefore $v_1 = v_2/n = 4(1.25) = \underline{\mathbf{5\ V}}$

Chapter 13, Solution 55.

We reflect Z_s to the primary side.

$Z_R = (500 - j200)/n^2 = 5 - j2,\ Z_{in} = Z_p + Z_R = 3 + j4 + 5 - j2 = 8 + j2$

$I_1 = 120\angle 0°/(8 + j2) = 14.552\angle -14.04°$

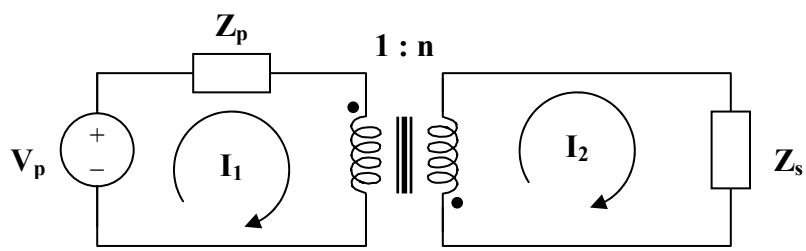

Since both currents enter the dotted terminals as shown above,

$I_2 = -(1/n)I_1 = -1.4552\angle -14.04° = 1.4552\angle 166°$

$S_2 = |I_2|^2 Z_s = (1.4552)(500 - j200)$

$P_2 = \text{Re}(S_2) = (1.4552)^2(500) = \underline{\mathbf{1054\ watts}}$

Chapter 13, Solution 56.

We apply mesh analysis to the circuit as shown below.

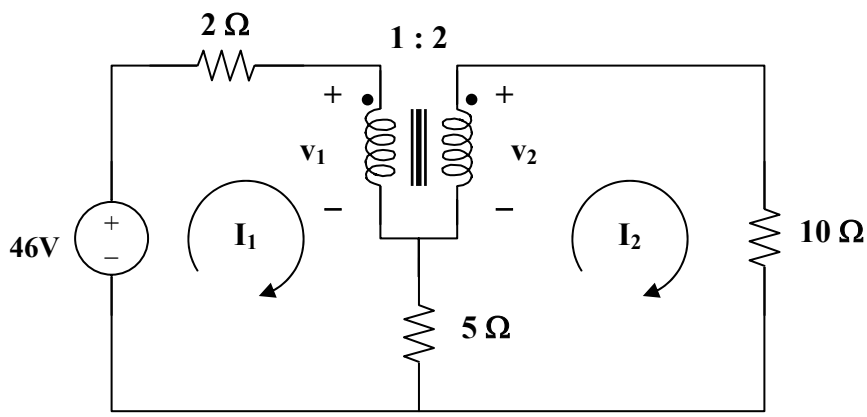

For mesh 1, $46 = 7I_1 - 5I_2 + v_1$ (1)

For mesh 2, $v_2 = 15I_2 - 5I_1$ (2)

At the terminals of the transformer,

$$v_2 = nv_1 = 2v_1 \quad (3)$$

$$I_1 = nI_2 = 2I_2 \quad (4)$$

Substituting (3) and (4) into (1) and (2),

$$46 = 9I_2 + v_1 \quad (5)$$

$$v_1 = 2.5I_2 \quad (6)$$

Combining (5) and (6), $46 = 11.5I_2$ or $I_2 = 4$

$P_{10} = 0.5I_2^2(10) =$ **<u>80 watts</u>**.

Chapter 13, Solution 57.

(a) $Z_L = j3||(12 - j6) = j3(12 - j6)/(12 - j3) = (12 + j54)/17$

Reflecting this to the primary side gives

$Z_{in} = 2 + Z_L/n^2 = 2 + (3 + j13.5)/17 = 2.3168\angle 20.04°$

$I_1 = v_s/Z_{in} = 60\angle 90°/2.3168\angle 20.04° =$ **$25.9\angle 69.96°$ A(rms)**

$I_2 = I_1/n =$ **$12.95\angle 69.96°$ A(rms)**

(b) $60\angle 90° = 2I_1 + v_1$ or $v_1 = j60 - 2I_1 = j60 - 51.8\angle 69.96°$

$v_1 =$ **$21.06\angle 147.44°$ V(rms)**

$v_2 = nv_1 =$ **$42.12\angle 147.44°$ V(rms)**

$v_o = v_2 =$ **$42.12\angle 147.44°$ V(rms)**

(c) $S = v_s I_1^* = (60\angle 90°)(25.9\angle -69.96°) =$ **$1554\angle 20.04°$ VA**

Chapter 13, Solution 58.

Consider the circuit below.

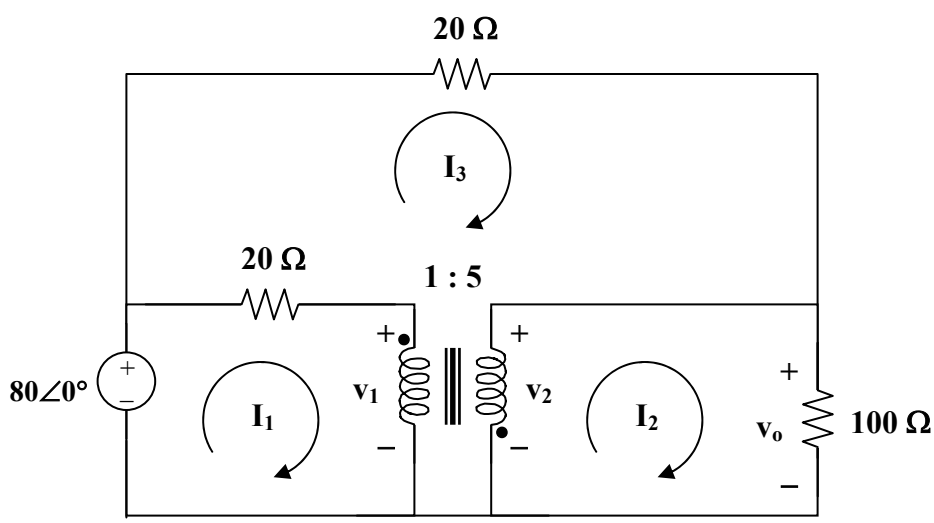

For mesh1, $80 = 20I_1 - 20I_3 + v_1$ (1)

For mesh 2, $v_2 = 100I_2$ (2)

For mesh 3, $0 = 40I_3 - 20I_1$ which leads to $I_1 = 2I_3$ (3)

At the transformer terminals, $v_2 = -nv_1 = -5v_1$ (4)

$$I_1 = -nI_2 = -5I_2 \quad (5)$$

From (2) and (4), $-5v_1 = 100I_2$ or $v_1 = -20I_2$ (6)

Substituting (3), (5), and (6) into (1),

$$4 = I_1 - I_2 - I_3 = I_1 - (I_1/(-5)) - I_1/2 = (7/10)I_1$$

$$I_1 = 40/7,\ I_2 = -8/7,\ I_3 = 20/7$$

p_{20}(the one between 1 and 3) $= 0.5(20)(I_1 - I_3)^2 = 10(20/7)^2 =$ **<u>81.63 watts</u>**

p_{20}(at the top of the circuit) $= 0.5(20)I_3^2 =$ **<u>81.63 watts</u>**

$p_{100} = 0.5(100)I_2^2 =$ **<u>65.31 watts</u>**

Chapter 13, Solution 59.

We apply nodal analysis to the circuit below.

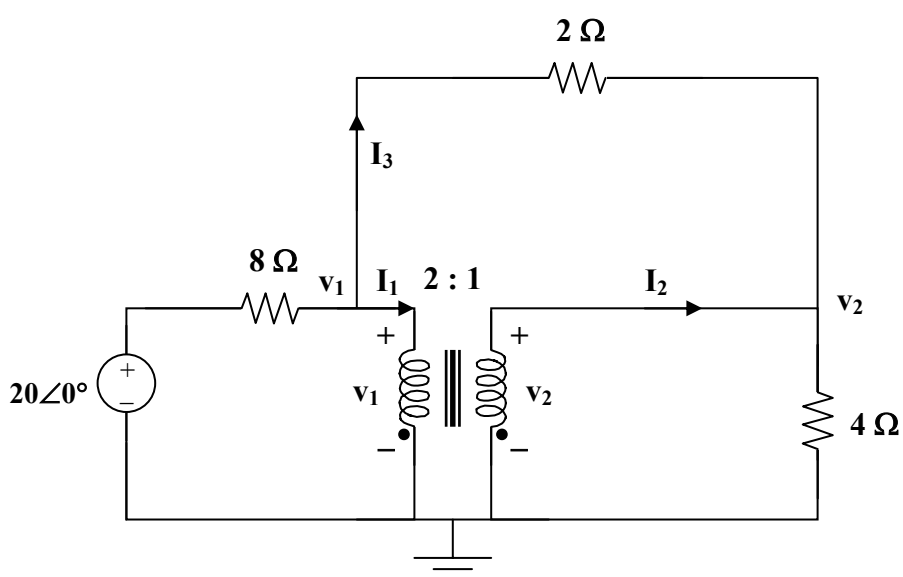

$$20 = 8I_1 + V_1 \quad (1)$$

$$V_1 = 2I_3 + V_2 \quad (2)$$

$$V_2 = 4I_2 \quad (3)$$

At the transformer terminals, $v_2 = 0.5v_1$ (4)

$$I_1 = 0.5I_2 \quad (5)$$

Solving (1) to (5) gives $I_1 = 0.833$ A, $I_2 = 1.667$ A, $I_3 = 3.333$ A

$$V_1 = 13.33 \text{ V}, \; V_2 = 6.667 \text{ V}.$$

$P_{8\Omega} = 0.5(8)|(20 - V_1)/8|^2 =$ **2.778 W**

$P_{2\Omega} = 0.5(2)I_3^2 =$ **11.11 W**, $P_{4\Omega} = 0.5V_2^2/4 =$ **5.556 W**

Chapter 13, Solution 60.

(a) Transferring the 40-ohm load to the middle circuit,

$Z_L' = 40/(n')^2 = 10$ ohms where $n' = 2$

$10||(5 + 10) = 6$ ohms

We transfer this to the primary side.

$Z_{in} = 4 + 6/n^2 = 4 + 96 = 100$ ohms, where $n = 0.25$

$I_1 = 120/100 =$ **1.2 A** and $I_2 = I_1/n =$ **4.8 A**

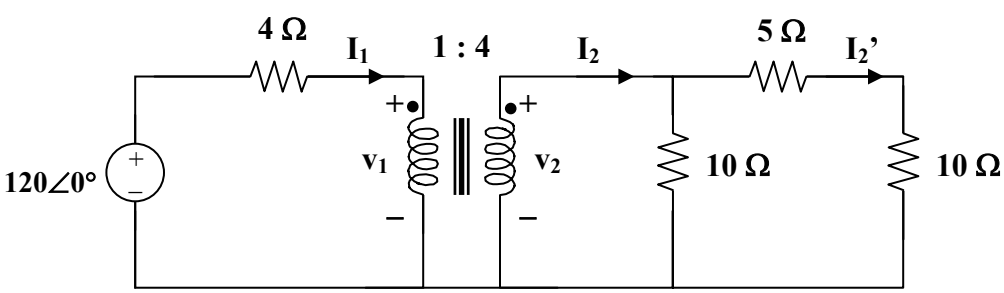

Using current division, $I_2' = (10/25)I_2 = 1.92$ and $I_3 = I_2'/n' =$ **0.96 A**

(b) $p = 0.5(I_3)^2(40) =$ **18.432 watts**

Chapter 13, Solution 61.

We reflect the 160-ohm load to the middle circuit.

$$Z_R = Z_L/n^2 = 160/(4/3)^2 = 90 \text{ ohms, where } n = 4/3$$

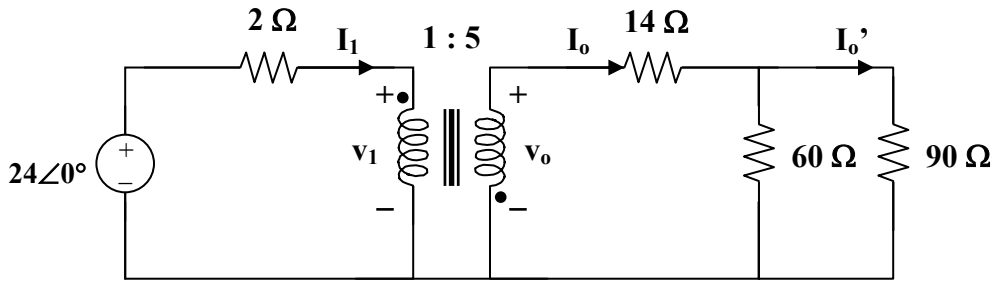

$$14 + 60||90 = 14 + 36 = 50 \text{ ohms}$$

We reflect this to the primary side.

$$Z_R' = Z_L'/(n')^2 = 50/5^2 = 2 \text{ ohms when } n' = 5$$

$$I_1 = 24/(2 + 2) = \underline{\mathbf{6A}}$$

$$24 = 2I_1 + v_1 \text{ or } v_1 = 24 - 2I_1 = 12 \text{ V}$$

$$v_o = -nv_1 = \underline{\mathbf{-60\ V}},\ I_o = -I_1/n_1 = -6/5 = -1.2$$

$$I_o' = [60/(60 + 90)]I_o = -0.48\text{A}$$

$$I_2 = -I_o'/n = 0.48/(4/3) = \underline{\mathbf{0.36\ A}}$$

Chapter 13, Solution 62.

(a) Reflect the load to the middle circuit.

$$Z_L' = 8 - j20 + (18 + j45)/3^2 = 10 - j15$$

We now reflect this to the primary circuit so that

$$Z_{in} = 6 + j4 + (10 - j15)/n^2 = 7.6 + j1.6 = 7.767\angle 11.89°, \text{ where } n = 5/2 = 2.5$$

$$I_1 = 40/Z_{in} = 40/7.767\angle 11.89° = 5.15\angle -11.89°$$

$$S = 0.5v_sI_1^* = (20\angle 0°)(5.15\angle 11.89°) = \underline{\mathbf{103\angle 11.89°\ VA}}$$

(b) $I_2 = -I_1/n, \quad n = 2.5$

$I_3 = -I_2/n', \quad n = 3$

$I_3 = I_1/(nn') = 5.15\angle{-11.89°}/(2.5x3) = 0.6867\angle{-11.89°}$

$p = 0.5|I_2|^2(18) = 9(0.6867)^2 =$ **4.244 watts**

Chapter 13, Solution 63.

Reflecting the (9 + j18)-ohm load to the middle circuit gives,

$Z_{in}' = 7 - j6 + (9 + j18)/(n')^2 = 7 - j6 + 1 + j12 = 8 + j4$ when $n' = 3$

Reflecting this to the primary side,

$Z_{in} = 1 + Z_{in}'/n^2 = 1 + 2 - j = 3 - j$, where $n = 2$

$I_1 = 12\angle 0°/(3 - j) = 12/3.162\angle{-18.43°} =$ **$3.795\angle 18.43$A**

$I_2 = I_1/n =$ **$1.8975\angle 18.43°$ A**

$I_3 = -I_2/n^2 =$ **$632.5\angle 161.57°$ mA**

Chapter 13, Solution 64.

We find Z_{Th} at the terminals of Z by considering the circuit below.

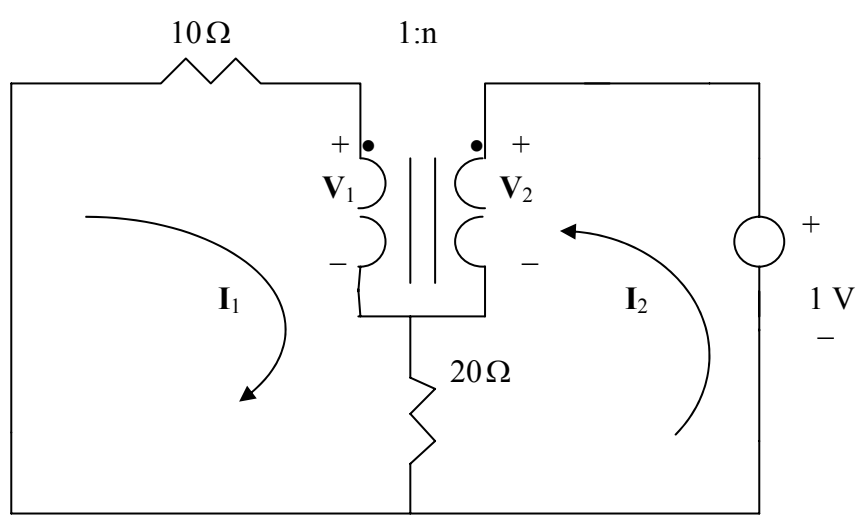

For mesh 1, $30I_1 + 20I_2 + V_1 = 0$ (1)

For mesh 2, $20I_1 + 20I_2 + V_2 = 1$ (2)

At the terminals, $V_2 = nV_1, \qquad I_2 = -\dfrac{I_1}{n}$

Substituting these in (1) and (2) leads to

$$(20 - 30n)I_2 + V_1 = 0, \qquad 20(1-n)I_2 + nV_1 = 1$$

Solving these gives

$$I_2 = \frac{1}{30n^2 - 40n + 20} \longrightarrow Z_{Th} = \frac{1}{I_2} = 30n^2 - 40n + 20 = 7.5$$

Solving the quadratic equation yields **<u>n=0.5 or 0.8333</u>**

Chapter 13, Solution 65.

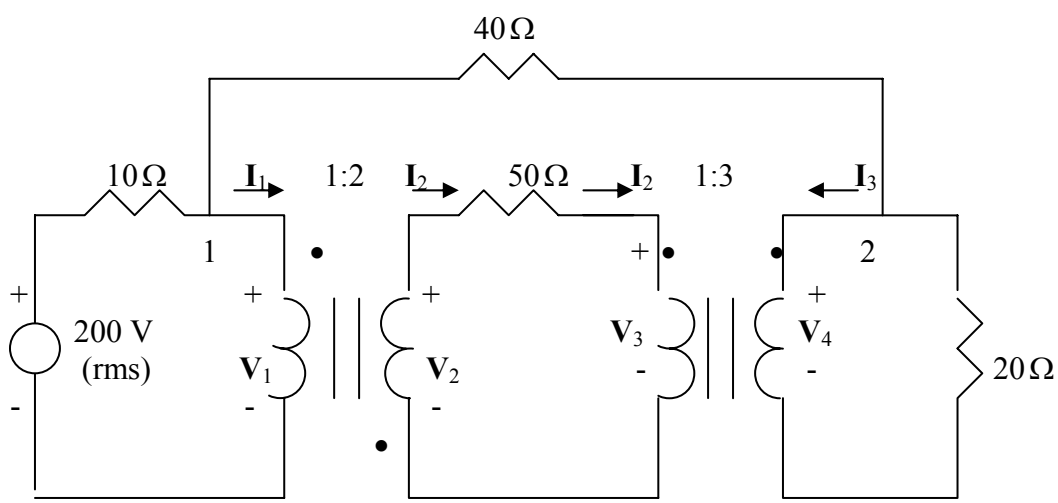

At node 1,

$$\frac{200 - V_1}{10} = \frac{V_1 - V_4}{40} + I_1 \longrightarrow 200 = 1.25V_1 - 0.25V_4 + 10I_1 \qquad (1)$$

At node 2,

$$\frac{V_1 - V_4}{40} = \frac{V_4}{20} + I_3 \qquad \longrightarrow \qquad V_1 = 3V_4 + 40I_3 \tag{2}$$

At the terminals of the first transformer,

$$\frac{V_2}{V_1} = -2 \qquad \longrightarrow \qquad V_2 = -2V_1 \tag{3}$$

$$\frac{I_2}{I_1} = -1/2 \qquad \longrightarrow \qquad I_1 = -2I_2 \tag{4}$$

For the middle loop,

$$-V_2 + 50I_2 + V_3 = 0 \qquad \longrightarrow \qquad V_3 = V_2 - 50I_2 \tag{5}$$

At the terminals of the second transformer,

$$\frac{V_4}{V_3} = 3 \qquad \longrightarrow \qquad V_4 = 3V_3 \tag{6}$$

$$\frac{I_3}{I_2} = -1/3 \qquad \longrightarrow \qquad I_2 = -3I_3 \tag{7}$$

We have seven equations and seven unknowns. Combining (1) and (2) leads to

$$200 = 3.5V_4 + 10I_1 + 50I_3$$

But from (4) and (7), $I_1 = -2I_2 = -2(-3I_3) = 6I_3$. Hence

$$200 = 3.5V_4 + 110I_3 \tag{8}$$

From (5), (6), (3), and (7),

$$V_4 = 3(V_2 - 50I_2) = 3V_2 - 150I_2 = -6V_1 + 450I_3$$

Substituting for V_1 in (2) gives

$$V_4 = -6(3V_4 + 40I_3) + 450I_3 \qquad \longrightarrow \qquad I_3 = \frac{19}{210}V_4 \tag{9}$$

Substituting (9) into (8) yields

$$200 = 13.452V_4 \quad \longrightarrow \quad V_4 = 14.87$$

$$P = \frac{V^2{}_4}{20} = \underline{11.05\text{ W}}$$

Chapter 13, Solution 66.

$$v_1 = 420\text{ V} \qquad (1)$$

$$v_2 = 120I_2 \qquad (2)$$

$$v_1/v_2 = 1/4 \text{ or } v_2 = 4v_1 \qquad (3)$$

$$I_1/I_2 = 4 \text{ or } I_1 = 4\ I_2 \qquad (4)$$

Combining (2) and (4),

$$v_2 = 120[(1/4)I_1] = 30\ I_1$$

$$4v_1 = 30I_1$$

$$4(420) = 1680 = 30I_1 \text{ or } I_1 = \underline{\mathbf{56\ A}}$$

Chapter 13, Solution 67.

(a) $$\frac{V_1}{V_2} = \frac{N_1 + N_2}{N_2} = \frac{1}{0.4} \quad \longrightarrow \quad V_2 = 0.4V_1 = 0.4x400 = \underline{160\text{ V}}$$

(b) $$S_2 = I_2V_2 = 5{,}000 \quad \longrightarrow \quad I_2 = \frac{5000}{160} = \underline{31.25\text{ A}}$$

(c) $$S_2 = S_1 = I_1V_1 = 5{,}000 \quad \longrightarrow \quad I_2 = \frac{5000}{400} = \underline{12.5\text{ A}}$$

Chapter 13, Solution 68.

This is a step-up transformer.

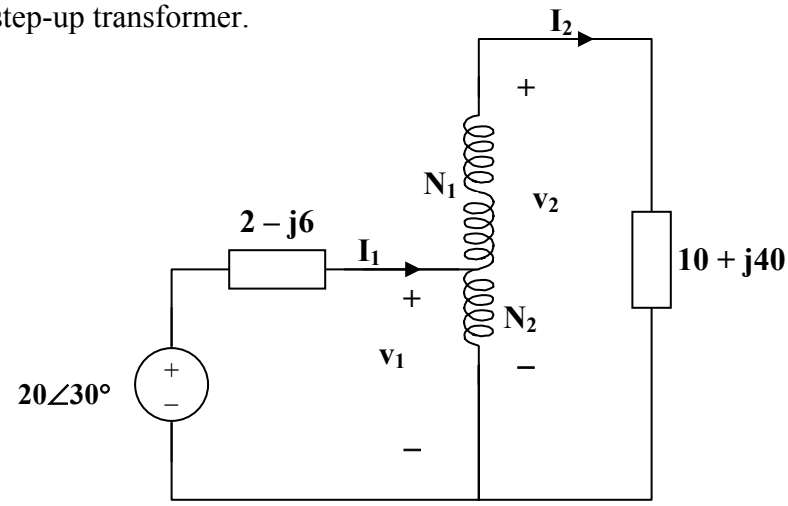

For the primary circuit, $20\angle 30° = (2 - j6)I_1 + v_1$ (1)

For the secondary circuit, $v_2 = (10 + j40)I_2$ (2)

At the autotransformer terminals,

$$v_1/v_2 = N_1/(N_1 + N_2) = 200/280 = 5/7,$$

$$\text{thus } v_2 = 7v_1/5 \quad (3)$$

Also, $I_1/I_2 = 7/5$ or $I_2 = 5I_1/7$ (4)

Substituting (3) and (4) into (2), $v_1 = (10 + j40)25I_1/49$

Substituting that into (1) gives $20\angle 30° = (7.102 + j14.408)I_1$

$I_1 = 20\angle 30°/16.063\angle 63.76° =$ **<u>1.245∠–33.76° A</u>**

$I_2 = 5I_1/7 =$ **<u>0.8893∠–33.76° A</u>**

$I_o = I_1 - I_2 = [(5/7) - 1]I_1 = -2I_1/7 =$ **<u>0.3557∠146.2° A</u>**

$p = |I_2|^2R = (0.8893)^2(10) =$ **<u>7.51 watts</u>**

Chapter 13, Solution 69.

We can find the Thevenin equivalent.

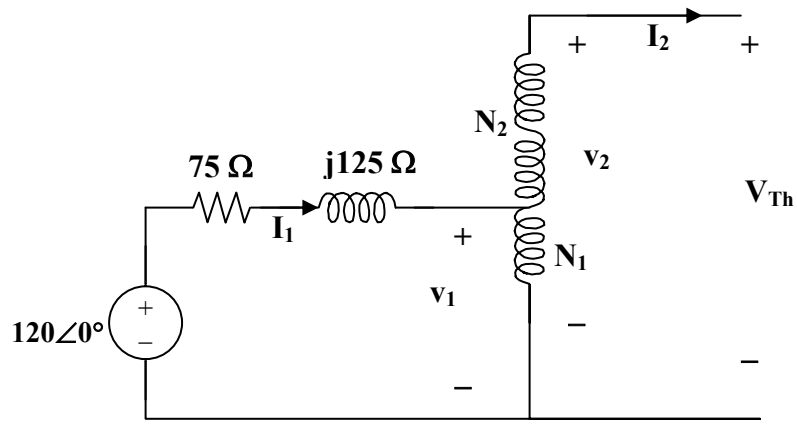

$$I_1 = I_2 = 0$$

As a step up transformer, $v_1/v_2 = N_1/(N_1 + N_2) = 600/800 = 3/4$

$$v_2 = 4v_1/3 = 4(120)/3 = 160\angle 0° \text{ rms} = V_{Th}.$$

To find Z_{Th}, connect a 1-V source at the secondary terminals. We now have a step-down transformer.

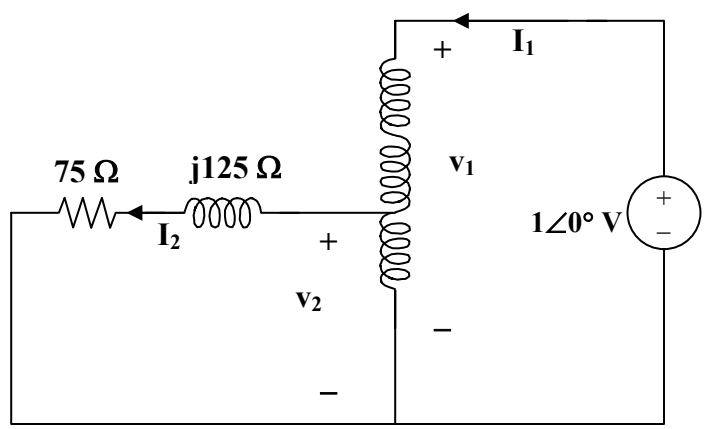

$$v_1 = 1\text{V}, \; v_2 = I_2(75 + j125)$$

But $v_1/v_2 = (N_1 + N_2)/N_1 = 800/200$ which leads to $v_1 = 4v_2 = 1$

and $v_2 = 0.25$

$I_1/I_2 = 200/800 = 1/4$ which leads to $I_2 = 4I_1$

Hence $0.25 = 4I_1(75 + j125)$ or $I_1 = 1/[16(75 + j125)$

$Z_{Th} = 1/I_1 = 16(75 + j125)$

Therefore, $Z_L = Z_{Th}^* =$ **(1.2 – j2) kΩ**

Since V_{Th} is rms, $p = (|V_{Th}|/2)^2/R_L = (80)^2/1200 =$ **5.333 watts**

Chapter 13, Solution 70.

This is a step-down transformer.

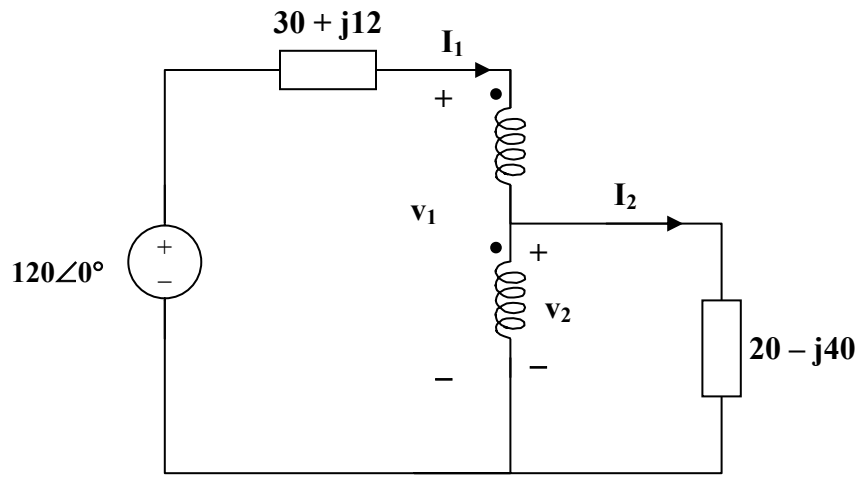

$I_1/I_2 = N_2/(N_1 + N_2) = 200/1200 = 1/6$, or $I_1 = I_2/6$ (1)

$v_1/v_2 = (N_2 + N_2)/N_2 = 6$, or $v_1 = 6v_2$ (2)

For the primary loop, $120 = (30 + j12)I_1 + v_1$ (3)

For the secondary loop, $v_2 = (20 - j40)I_2$ (4)

Substituting (1) and (2) into (3),

$120 = (30 + j12)(I_2/6) + 6v_2$

and substituting (4) into this yields

$120 = (49 - j38)I_2$ or $I_2 = 1.935\angle 37.79°$

$p = |I_2|^2(20) =$ **74.9 watts**.

Chapter 13, Solution 71.

$Z_{in} = V_1/I_1$

But $\quad V_1I_1 = V_2I_2$, or $V_2 = I_2Z_L$ and $I_1/I_2 = N_2/(N_1 + N_2)$

Hence $\quad V_1 = V_2I_2/I_1 = Z_L(I_2/I_1)I_2 = Z_L(I_2/I_1)^2I_1$

$V_1/I_1 = Z_L[(N_1 + N_2)/N_2]^2$

$Z_{in} = \underline{\mathbf{[1 + (N_1/N_2)]^2Z_L}}$

Chapter 13, Solution 72.

(a) Consider just one phase at a time.

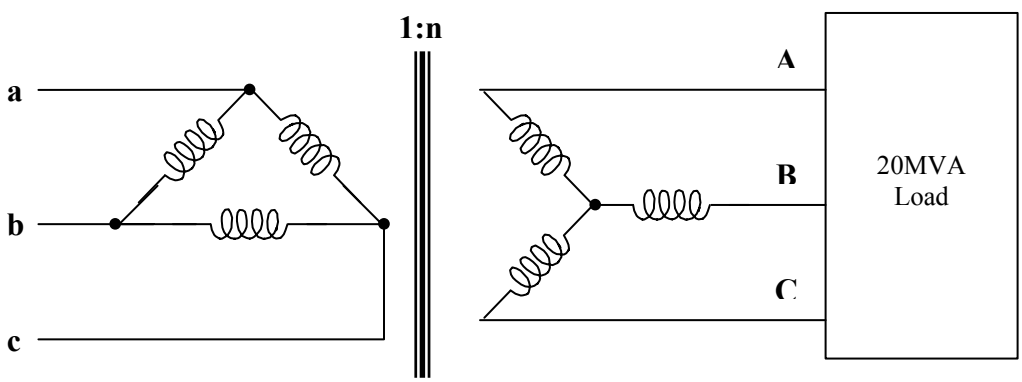

$$n = V_L/\sqrt{3}V_{Lp} = 7200/(12470\sqrt{3}) = \underline{\mathbf{1/3}}$$

(b) The load carried by each transformer is 60/3 = 20 MVA.

Hence $\quad I_{Lp} = 20\text{ MVA}/12.47\text{ k} = \underline{\mathbf{1604\ A}}$

$I_{Ls} = 20\text{ MVA}/7.2\text{ k} = \underline{\mathbf{2778\ A}}$

(c) The current in incoming line a, b, c is

$$\sqrt{3}I_{Lp} = \sqrt{3}\text{x}1603.85 = \underline{\mathbf{2778\ A}}$$

Current in each outgoing line A, B, C is

$$2778/(n\sqrt{3}) = \underline{\mathbf{4812\ A}}$$

Chapter 13, Solution 73.

(a) This is a **<u>three-phase Δ-Y transformer</u>**.

(b) $V_{Ls} = nv_{Lp}/\sqrt{3} = 450/(3\sqrt{3}) = 86.6$ V, where $n = 1/3$

As a Y-Y system, we can use per phase equivalent circuit.

$I_a = V_{an}/Z_Y = 86.6\angle 0°/(8 - j6) = 8.66\angle 36.87°$

$I_c = I_a\angle 120° = \underline{\mathbf{8.66\angle 156.87°\ A}}$

$I_{Lp} = n\sqrt{3}\, I_{Ls}$

$I_1 = (1/3)\sqrt{3}\,(8.66\angle 36.87°) = 5\angle 36.87°$

$I_2 = I_1\angle -120° = \underline{\mathbf{5\angle -83.13°\ A}}$

(c) $p = 3|I_a|^2(8) = 3(8.66)^2(8) = \underline{\mathbf{1.8\ kw}}$.

Chapter 13, Solution 74.

(a) This is a **<u>Δ-Δ connection</u>**.

(b) The easy way is to consider just one phase.

$$1{:}n = 4{:}1 \text{ or } n = 1/4$$

$n = V_2/V_1$ which leads to $V_2 = nV_1 = 0.25(2400) = 600$

$$\text{i.e. } V_{Lp} = 2400 \text{ V and } V_{Ls} = 600 \text{ V}$$

$S = p/\cos\theta = 120/0.8$ kVA $= 150$ kVA

$p_L = p/3 = 120/3 = 40$ kw

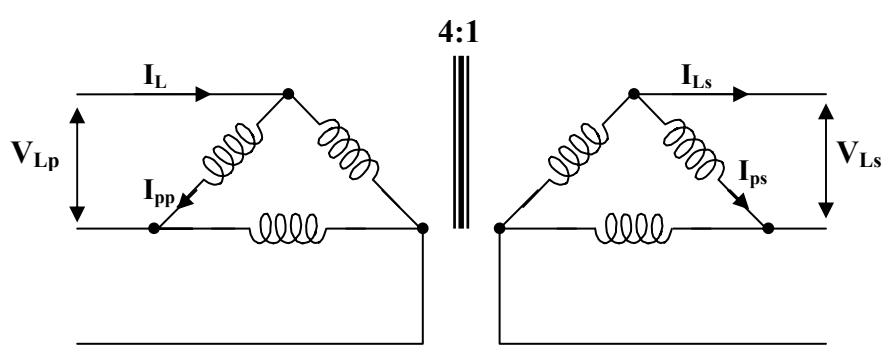

But $p_{Ls} = V_{ps}I_{ps}$

For the Δ-load, $I_L = \sqrt{3}\, I_p$ and $V_L = V_p$

Hence, $I_{ps} = 40{,}000/600 = 66.67$ A

$$I_{Ls} = \sqrt{3}\, I_{ps} = \sqrt{3} \times 66.67 = \underline{\mathbf{115.48\ A}}$$

(c) Similarly, for the primary side

$$p_{pp} = V_{pp}I_{pp} = p_{ps} \text{ or } I_{pp} = 40{,}000/2400 = \underline{\mathbf{16.667\ A}}$$

$$\text{and} \quad I_{Lp} = \sqrt{3}\, I_p = \underline{\mathbf{28.87\ A}}$$

(d) Since $S = 150$ kVA therefore $S_p = S/3 = \underline{\mathbf{50\ kVA}}$

Chapter 13, Solution 75.

(a) $n = V_{Ls}/(\sqrt{3}\, V_{Lp})$ $4500/(900\sqrt{3}) = \underline{\mathbf{2.887}}$

(b) $S = \sqrt{3}\, V_{Ls}I_{Ls}$ or $I_{Ls} = 120{,}000/(900\sqrt{3}) = \underline{\mathbf{76.98\ A}}$

$I_{Ls} = I_{Lp}/(n\sqrt{3}) = 76.98/(2.887\sqrt{3}) = \underline{\mathbf{15.395\ A}}$

Chapter 13, Solution 76.

(a) At the load, $V_L = 240\ V = V_{AB}$

$$V_{AN} = V_L/\sqrt{3} = 138.56\ V$$

Since $S = \sqrt{3}\, V_L I_L$ then $I_L = 60{,}000/(240\sqrt{3}) = \underline{\mathbf{144.34\ A}}$

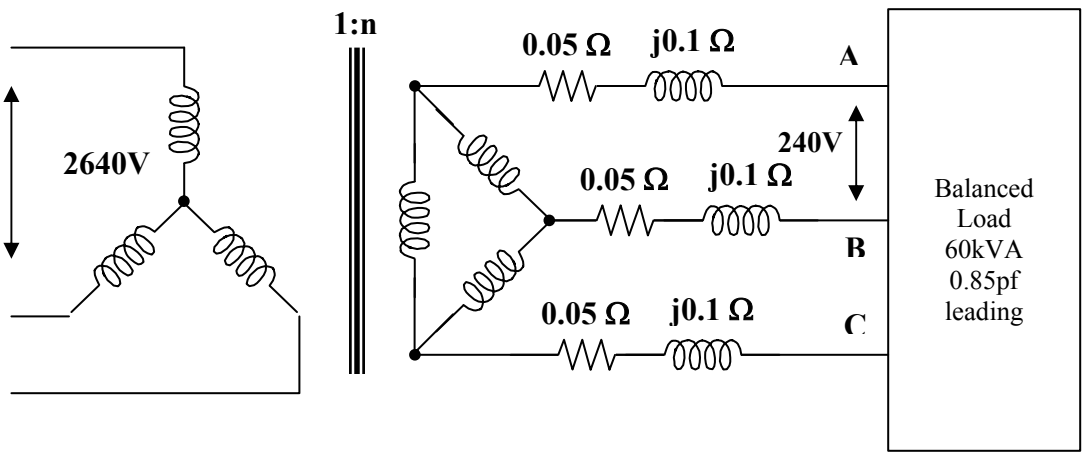

(b) Let $V_{AN} = |V_{AN}|\angle 0° = 138.56\angle 0°$

$\cos\theta = pf = 0.85$ or $\theta = 31.79°$

$I_{AA'} = I_L\angle\theta = 144.34\angle 31.79°$

$V_{A'N'} = ZI_{AA'} + V_{AN}$

$= 138.56\angle 0° + (0.05 + j0.1)(144.34\angle 31.79°)$

$= 138.03\angle 6.69°$

$V_{Ls} = V_{A'N'}\sqrt{3} = 137.8\sqrt{3} =$ **<u>238.7 V</u>**

(c) For Y-Δ connections,

$n = \sqrt{3}\, V_{Ls}/V_{ps} = \sqrt{3}\,\text{x}238.7/2640 = 0.1569$

$f_{Lp} = nI_{Ls}/\sqrt{3} = 0.1569\text{x}144.34/\sqrt{3} =$ **<u>13.05 A</u>**

Chapter 13, Solution 77.

(a) This is a single phase transformer. $V_1 = 13.2$ kV, $V_2 = 120$ V

$n = V_2/V_1 = 120/13{,}200 = 1/110$, therefore $n =$ **<u>110</u>**

(b) $P = VI$ or $I = P/V = 100/120 = 0.8333$ A

$I_1 = nI_2 = 0.8333/110 =$ **<u>7.576 mA</u>**

Chapter 13, Solution 78.

The schematic is shown below.

$$k = M/\sqrt{L_1L_2} = 1/\sqrt{6x3} = 0.2357$$

In the AC Sweep box, set Total Pts = 1, Start Freq = 0.1592 and End Freq = 0.1592. After simulation, the output file includes

FREQ	IM(V_PRINT1)	IP(V_PRINT1)
1.592 E–01	4.253 E+00	–8.526 E+00
FREQ	IM(V_PRINT2)	IP(V_PRINT2)
1.592 E–01	1.564 E+00	2.749 E+01

From this, I_1 = **4.253∠–8.53° A**, I_2 = **1.564∠27.49° A**

The power absorbed by the 4-ohm resistor = $0.5|I|^2R = 0.5(1.564)^2x4$

= **4.892 watts**

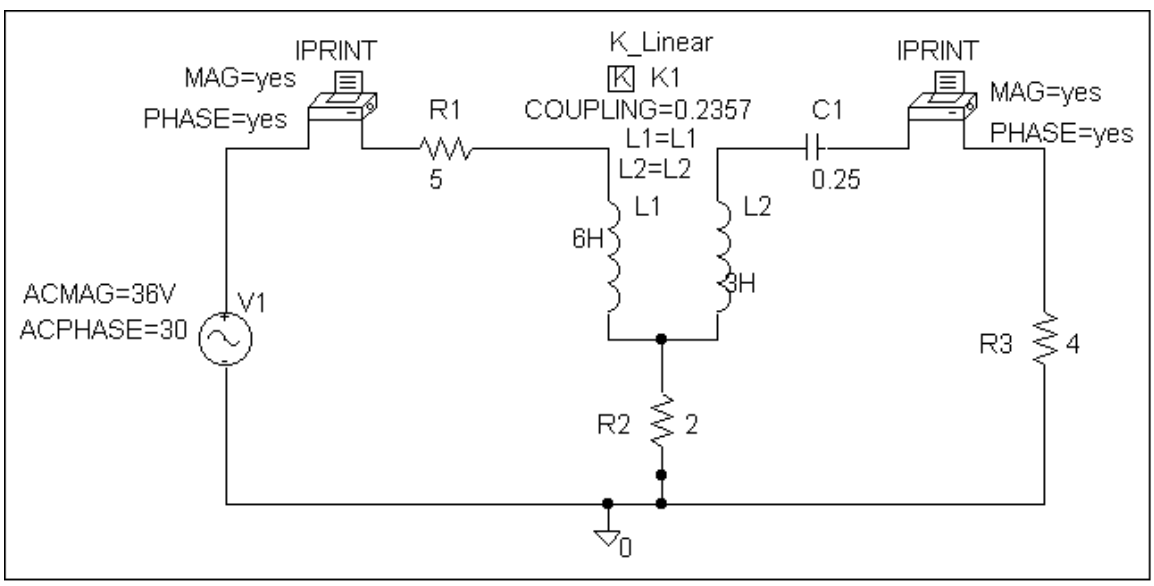

Chapter 13, Solution 79.

The schematic is shown below.

$$k_1 = 15/\sqrt{5000} = 0.2121,\ k_2 = 10/\sqrt{8000} = 0.1118$$

In the AC Sweep box, we type Total Pts = 1, Start Freq = 0.1592, and End Freq = 0.1592. After the circuit is saved and simulated, the output includes

FREQ	IM(V_PRINT1)	IP(V_PRINT1)
1.592 E–01	4.068 E–01	–7.786 E+01
FREQ	IM(V_PRINT2)	IP(V_PRINT2)
1.592 E–01	1.306 E+00	–6.801 E+01
FREQ	IM(V_PRINT3)	IP(V_PRINT3)
1.592 E–01	1.336 E+00	–5.492 E+01

Thus, I_1 = **<u>1.306∠–68.01° A</u>**, I_2 = **<u>406.8∠–77.86° mA</u>**, I_3 = **<u>1.336∠–54.92° A</u>**

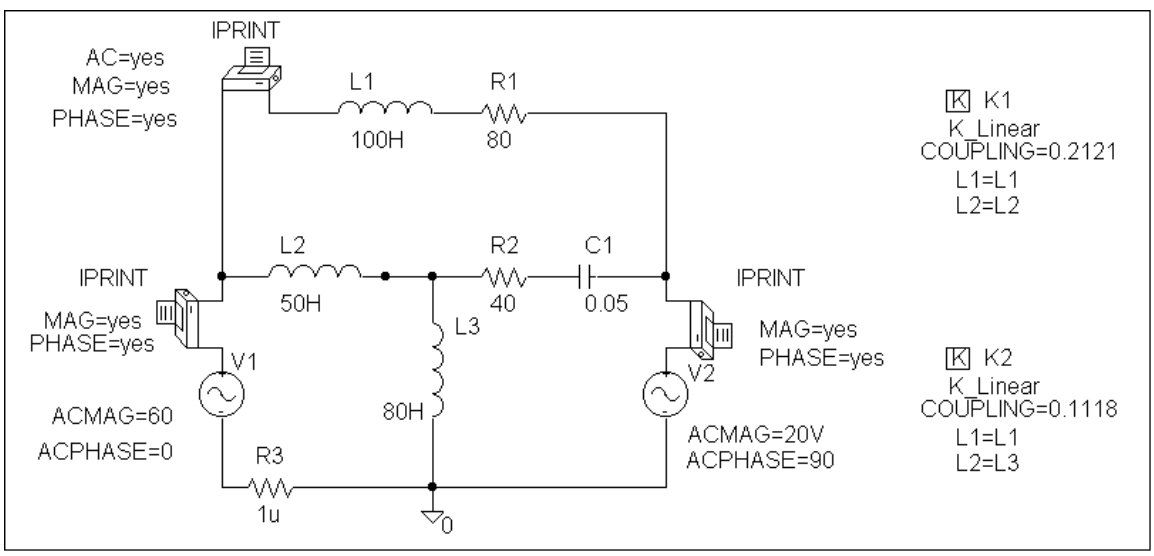

Chapter 13, Solution 80.

The schematic is shown below.

$$k_1 = 10/\sqrt{40x80} = 0.1768,\ k_2 = 20/\sqrt{40x60} = 0.482$$

$$k_3 = 30/\sqrt{80x60} = 0.433$$

In the AC Sweep box, we set Total Pts = 1, Start Freq = 0.1592, and End Freq = 0.1592. After the simulation, we obtain the output file which includes

FREQ	IM(V_PRINT1)	IP(V_PRINT1)
1.592 E–01	1.304 E+00	6.292 E+01

i.e. I_o = **<u>1.304∠62.92° A</u>**

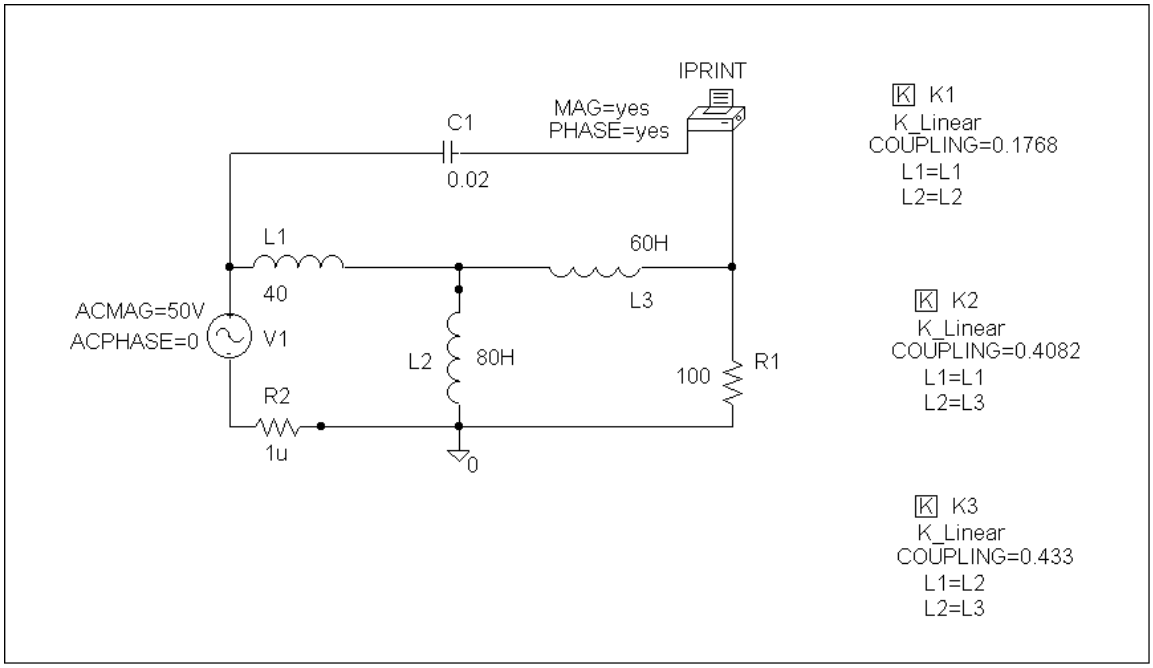

Chapter 13, Solution 81.

The schematic is shown below.

$$k_1 = 2/\sqrt{4x8} = 0.3535,\ k_2 = 1/\sqrt{2x8} = 0.25$$

In the AC Sweep box, we let Total Pts = 1, Start Freq = 100, and End Freq = 100. After simulation, the output file includes

FREQ	IM(V_PRINT1)	IP(V_PRINT1)
1.000 E+02	1.0448 E–01	1.396 E+01

FREQ	IM(V_PRINT2)	IP(V_PRINT2)
1.000 E+02	2.954 E–02	–1.438 E+02

FREQ	IM(V_PRINT3)	IP(V_PRINT3)
1.000 E+02	2.088 E–01	2.440 E+01

i.e. I_1 = **104.5∠13.96° mA**, I_2 = **29.54∠–143.8° mA**,

I_3 = **208.8∠24.4° mA**.

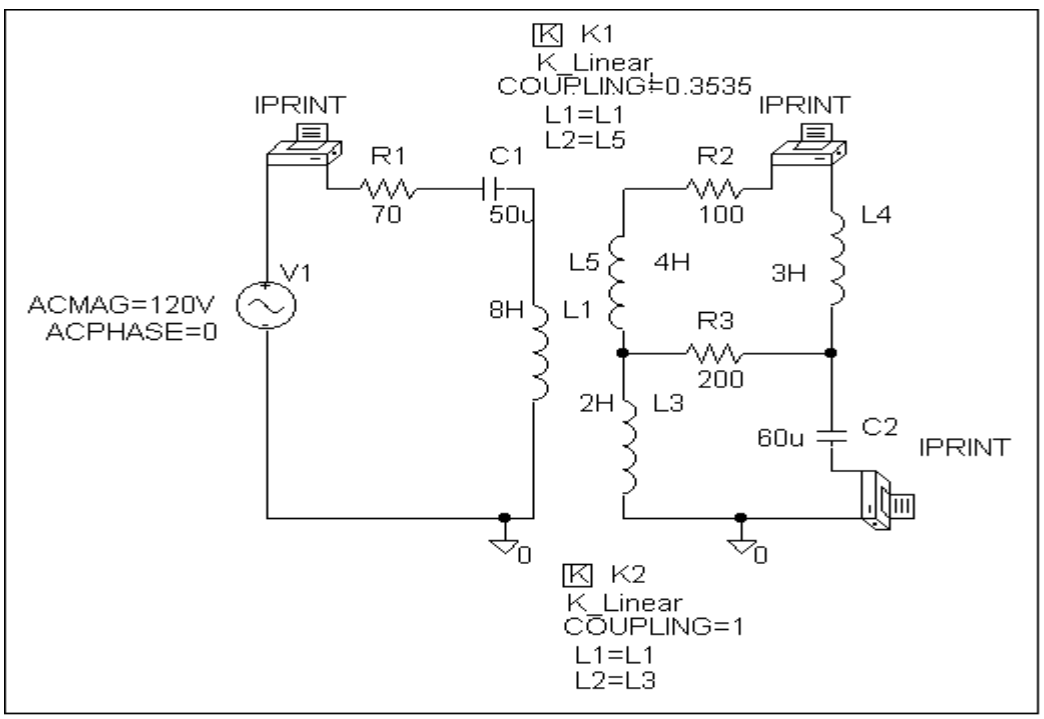

Chapter 13, Solution 82.

The schematic is shown below. In the AC Sweep box, we type Total Pts = 1, Start Freq = 0.1592, and End Freq = 0.1592. After simulation, we obtain the output file which includes

FREQ	IM(V_PRINT1)	IP(V_PRINT1)
1.592 E–01	1.955 E+01	8.332 E+01

FREQ	IM(V_PRINT2)	IP(V_PRINT2)
1.592 E–01	6.847 E+01	4.640 E+01

FREQ	IM(V_PRINT3)	IP(V_PRINT3)
1.592 E–01	4.434 E–01	–9.260 E+01

i.e. V_1 = **<u>19.55∠83.32° V</u>**, V_2 = **<u>68.47∠46.4° V</u>**,

I_o = **<u>443.4∠–92.6° mA</u>**.

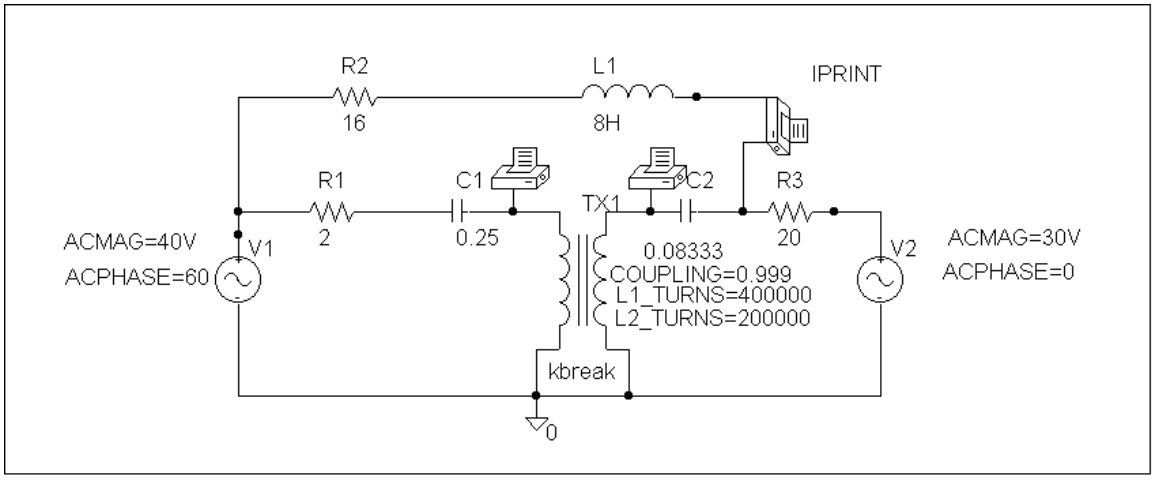

Chapter 13, Solution 83.

The schematic is shown below. In the AC Sweep box, we set Total Pts = 1, Start Freq = 0.1592, and End Freq = 0.1592. After simulation, the output file includes

FREQ	IM(V_PRINT1)	IP(V_PRINT1)
1.592 E–01	1.080 E+00	3.391 E+01

FREQ	VM($N_0001)	VP($N_0001)
1.592 E–01	1.514 E+01	–3.421 E+01

i.e. i_X = **<u>1.08∠33.91° A</u>**, V_x = **<u>15.14∠–34.21° V</u>**.

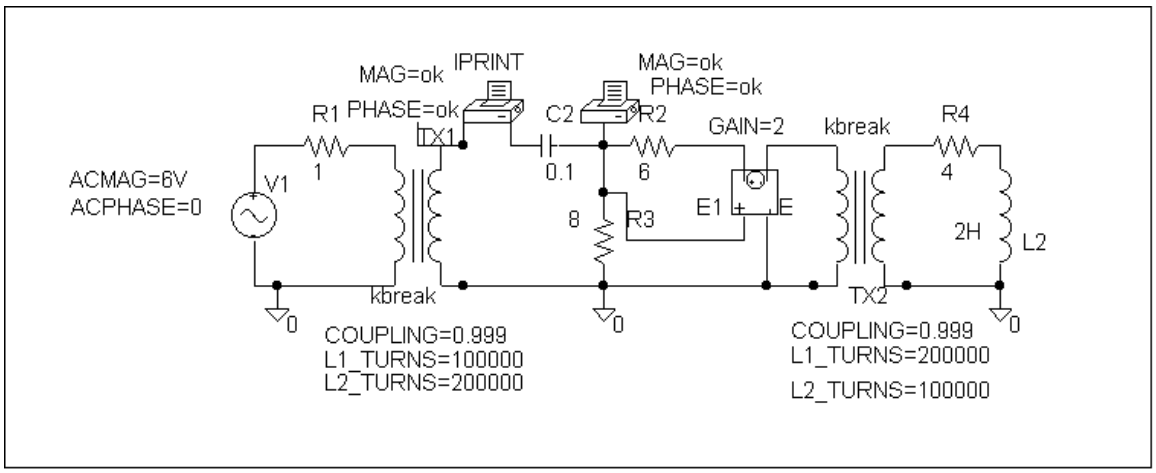

Chapter 13, Solution 84.

The schematic is shown below. We set Total Pts = 1, Start Freq = 0.1592, and End Freq = 0.1592. After simulation, the output file includes

FREQ	IM(V_PRINT1)	IP(V_PRINT1)
1.592 E–01	4.028 E+00	–5.238 E+01

FREQ	IM(V_PRINT2)	IP(V_PRINT2)
1.592 E–01	2.019 E+00	–5.211 E+01

FREQ	IM(V_PRINT3)	IP(V_PRINT3)
1.592 E–01	1.338 E+00	–5.220 E+01

i.e. I_1 = **4.028∠–52.38° A**, I_2 = **2.019∠–52.11° A**,

I_3 = **1.338∠–52.2° A**.

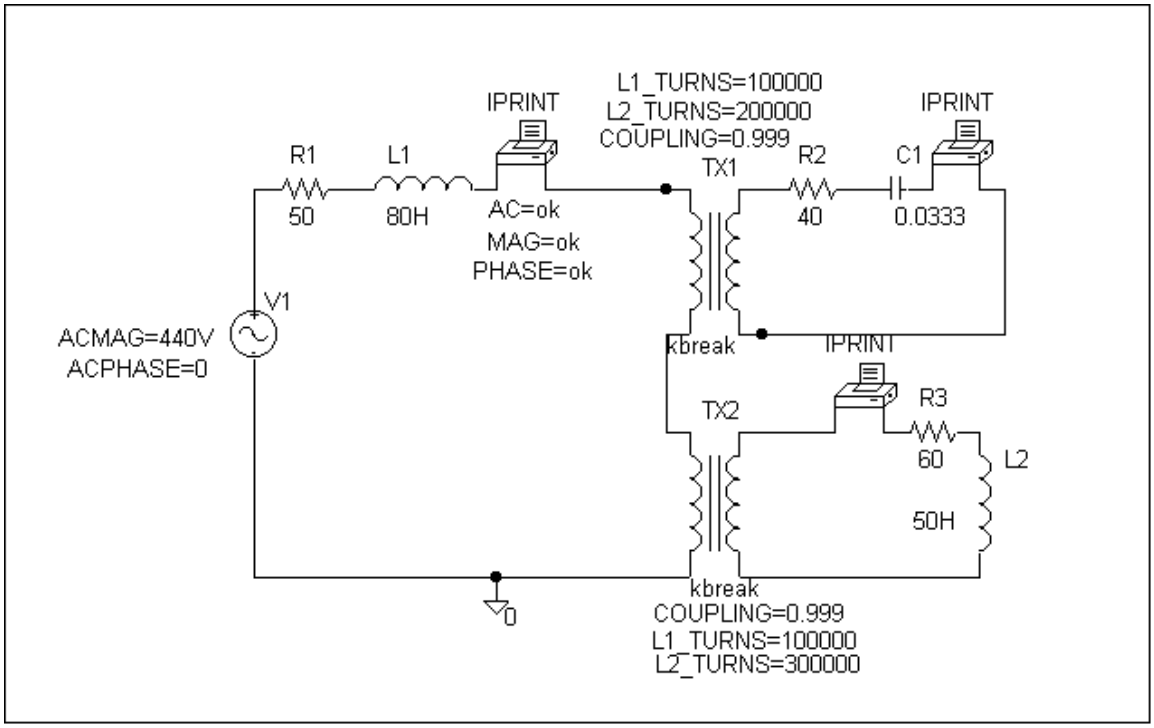

Chapter 13, Solution 85.

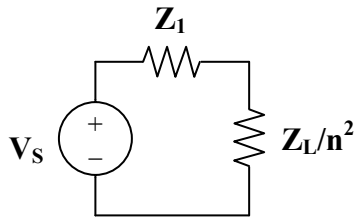

For maximum power transfer,

$$Z_1 = Z_L/n^2 \text{ or } n^2 = Z_L/Z_1 = 8/7200 = 1/900$$

$n = 1/30 = N_2/N_1$. Thus $N_2 = N_1/30 = 3000/30 =$ **<u>100 turns</u>**.

Chapter 13, Solution 86.

$n = N_2/N_1 = 48/2400 = 1/50$

$Z_{Th} = Z_L/n^2 = 3/(1/50)^2 =$ **<u>7.5 kΩ</u>**

Chapter 13, Solution 87.

$Z_{Th} = Z_L/n^2$ or $n = \sqrt{Z_L / Z_{Th}} = \sqrt{75/300} = \underline{\mathbf{0.5}}$

Chapter 13, Solution 88.

$n = V_2/V_1 = I_1/I_2$ or $I_2 = I_1/n = 2.5/0.1 = 25$ A

$p = IV = 25x12.6 =$ **315 watts**

Chapter 13, Solution 89.

$n = V_2/V_1 = 120/240 = 0.5$

$S = I_1V_1$ or $I_1 = S/V_1 = 10x10^3/240 = 41.67$ A

$S = I_2V_2$ or $I_2 = S/V_2 = 10^4/120 = 83.33$ A

Chapter 13, Solution 90.

(a) $n = V_2/V_1 = 240/2400 =$ **0.1**

(b) $n = N_2/N_1$ or $N_2 = nN_1 = 0.1(250) =$ **25 turns**

(c) $S = I_1V_1$ or $I_1 = S/V_1 = 4x10^3/2400 =$ **1.6667 A**

$S = I_2V_2$ or $I_2 = S/V_2 = 4x10^4/240 =$ **16.667 A**

Chapter 13, Solution 91.

(a) The kVA rating is $S = VI = 25{,}000x75 =$ **1875 kVA**

(b) Since $S_1 = S_2 = V_2I_2$ and $I_2 = 1875x10^3/240 =$ **7812 A**

Chapter 13, Solution 92.

(a) $V_2/V_1 = N_2/N_1 = n$, $V_2 = (N_2/N_1)V_1 = (28/1200)4800 =$ **<u>112 V</u>**

(b) $I_2 = V_2/R = 112/10 =$ **<u>11.2 A</u>** and $I_1 = nI_2$, $n = 28/1200$

$I_1 = (28/1200)11.2 =$ **<u>261.3 mA</u>**

(c) $p = |I_2|^2R = (11.2)^2(10) =$ **<u>1254 watts</u>**.

Chapter 13, Solution 93.

(a) For an input of 110 V, the primary winding must be connected in parallel, with series-aiding on the secondary. The coils must be series-opposing to give 12 V. Thus the connections are shown below.

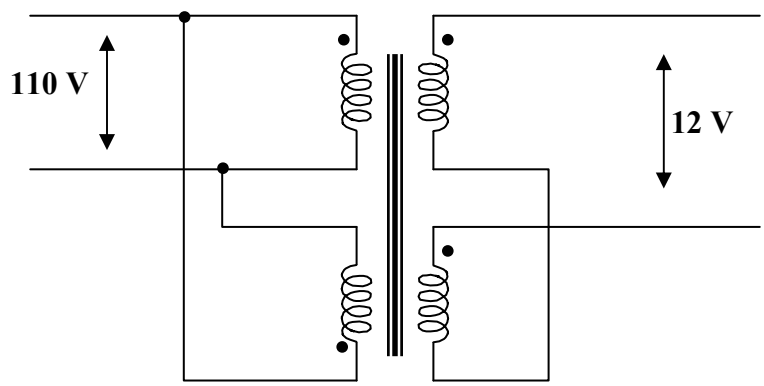

(b) To get 220 V on the primary side, the coils are connected in series, with series-aiding on the secondary side. The coils must be connected series-aiding to give 50 V. Thus, the connections are shown below.

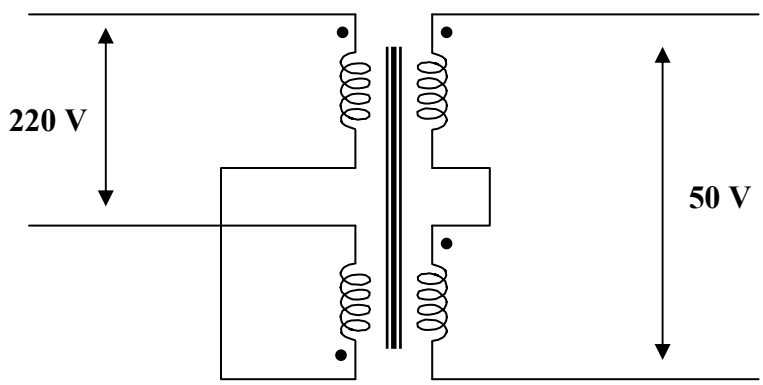

Chapter 13, Solution 94.

$V_2/V_1 = 110/440 = 1/4 = I_1/I_2$

There are four ways of hooking up the transformer as an auto-transformer. However it is clear that there are only two outcomes.

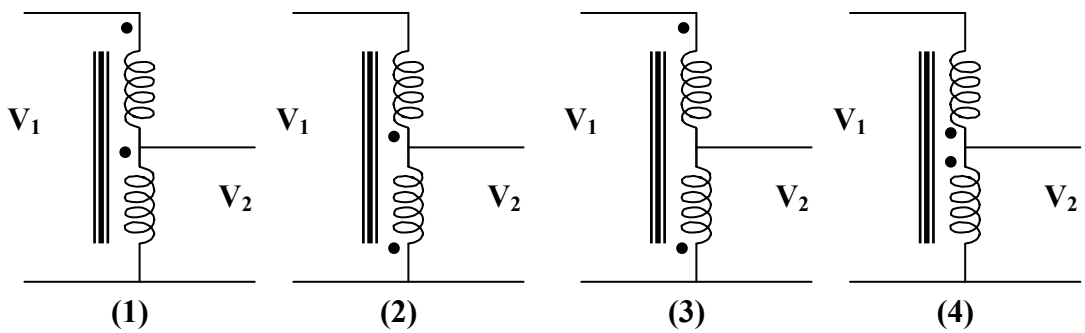

(1) and (2) produce the same results and (3) and (4) also produce the same results. Therefore, we will only consider Figure (1) and (3).

(a) For Figure (3), $V_1/V_2 = 550/V_2 = (440 - 110)/440 = 330/440$

Thus, $V_2 = 550x440/330 =$ **733.4 V (not the desired result)**

(b) For Figure (1), $V_1/V_2 = 550/V_2 = (440 + 110)/440 = 550/440$

Thus, $V_2 = 550x440/550 =$ **440 V (the desired result)**

Chapter 13, Solution 95.

(a) $n = V_s/V_p = 120/7200 =$ **1/60**

(b) $I_s = 10x120/144 = 1200/144$

$$S = V_pI_p = V_sI_s$$

$$I_p = V_sI_s/V_p = (1/60)x1200/144 =$$ **139 mA**